NOUVELLE CONSTRUCTION

MAISON III

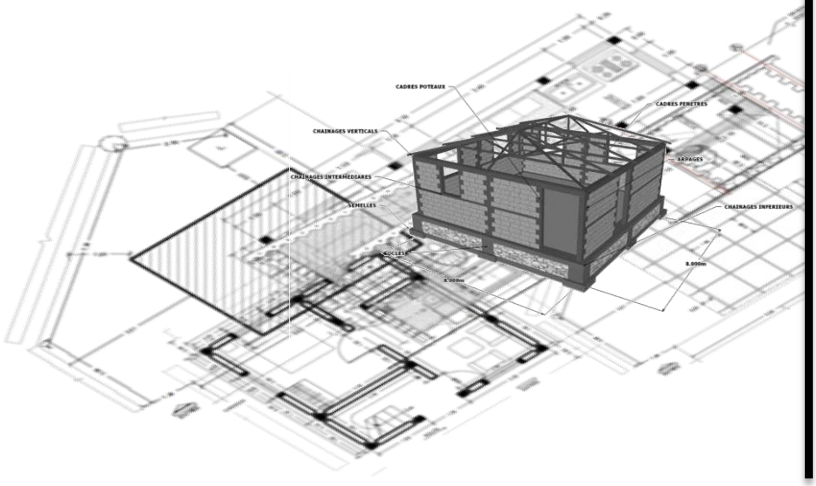

25m^2 RDC

$ 8981US

$359US/m^2

25m^2 ÉTAGE

$ 5690US

$228US/m^2

MAISON AVEC ÉTAGE EN MAÇONNERIE CHAINÉE

build change

DESIGN BASIS FOR NEW CONSTRUCIONS

Building Codes

Minimum Design Loads for Buildings and Other Structures, American Society of Civil Engineers, SEI/ASCE 7-05, 2005
Code International de Construction, International Building Code (IBC), International Code Council, 2009
Wind Speed Maps for the Caribbean for Application with the Wind Load Provisions of ASCE 7, Pan American Health Organization (PAHO), 2008
Documentation for Initial Seismic Hazard Maps for Haiti, United States Geological Survey (USGS), 2010

Material Design Codes

Building Code Requirements for Structural Concrete (ACI 318-08), American Concrete Institute
Building Code Requirements for Masonry Structures (ACI 530-08), American Concrete Institute, 2008
Wood Frame Construction Manual for One- and Two-Family Dwellings (WFCM-01), American Forest and Paper Association, 2001
Design Specification for Wood Construction with 2005 Supplement (NDS-05), American Forest and Paper Association National, 2005
Special Design Provisions for Wind and Seismic (ANSI/AF&PA SDPWS-08), American Forest and Paper Association, 2008
Steel Construction Manual, 13th Edition (AISC 13ed), American Institute of Steel Construction, 2005
Building Code Requirements for Masonry Structures (TMS 602-08), The Masonry Society, 2008

Loads

Dead Loads
Soil Bearing Capacity: 0.25kN/m2
Concrete Slabs: 4.00kN/m2
Masonry Walls: 2.50kN/m2

Gravity Live Loads
Concrete Slabs: 2.5kN/m2
Lightweight Roofs: 1.0kN/m2

Wind Loads
Analysis: Method 1 – Simplified Procedure
Base Wind Speed: 119mph (53.2m/s)
Importance Factor, I : 1.0
Exposure Category: C

Seismic Loads

Ss= 1.590	SM1= 0.930
S1= 0.620	SD1= 0.6200
Fa= 1.00	Seismic category= D
Fv= 1.5	Importance Factor, I : 1.0
SMs= 1.590	

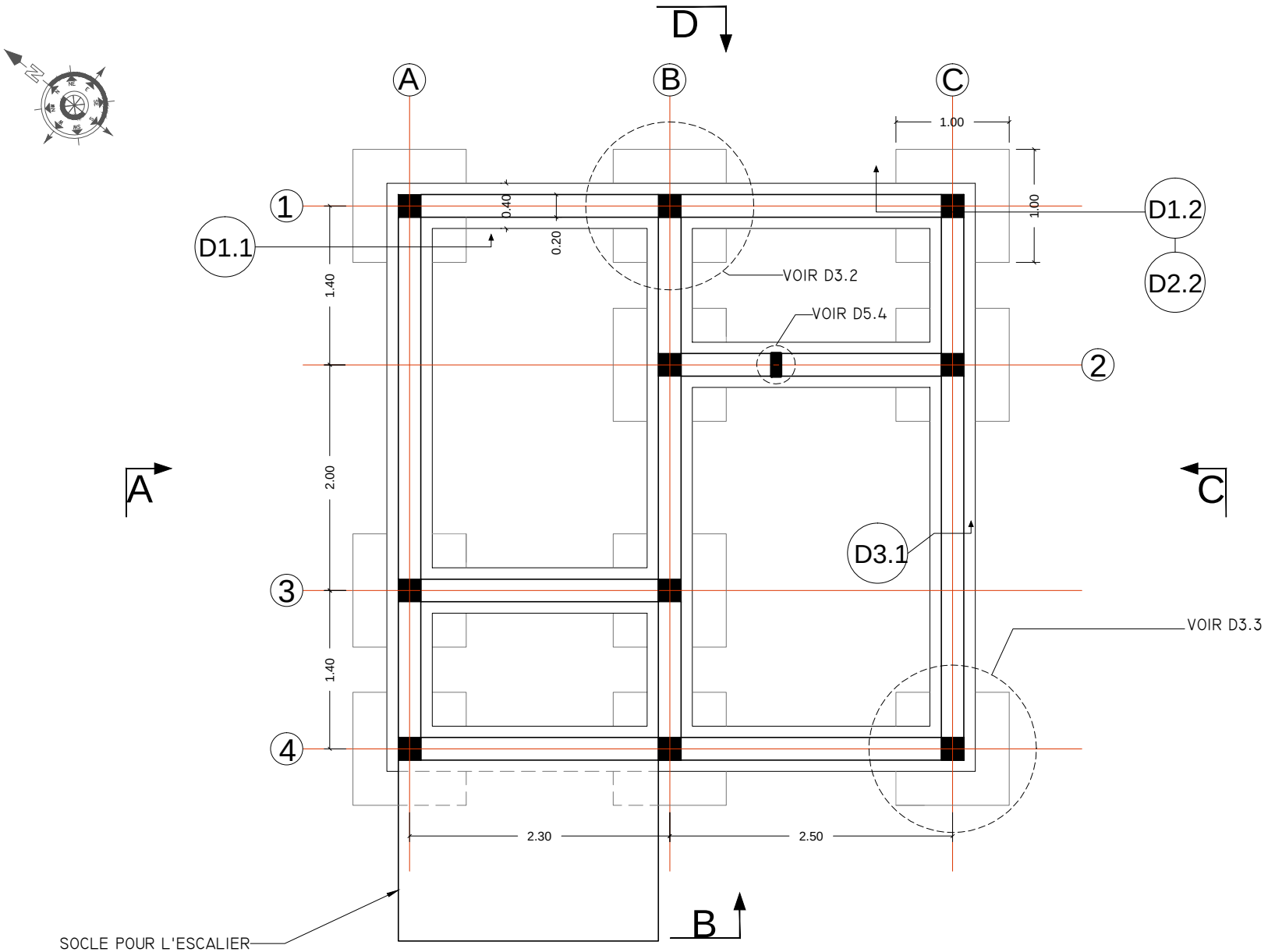

PLAN D'IMPLANTATION ET DES FONDATIONS

ECH.:1/100

build change

MAISON III

PLAN D'IMPLANTATION ET DES FONDATIONS

NOTE:

DATE:16 FÉVRIER 2012

ECH.:1/50

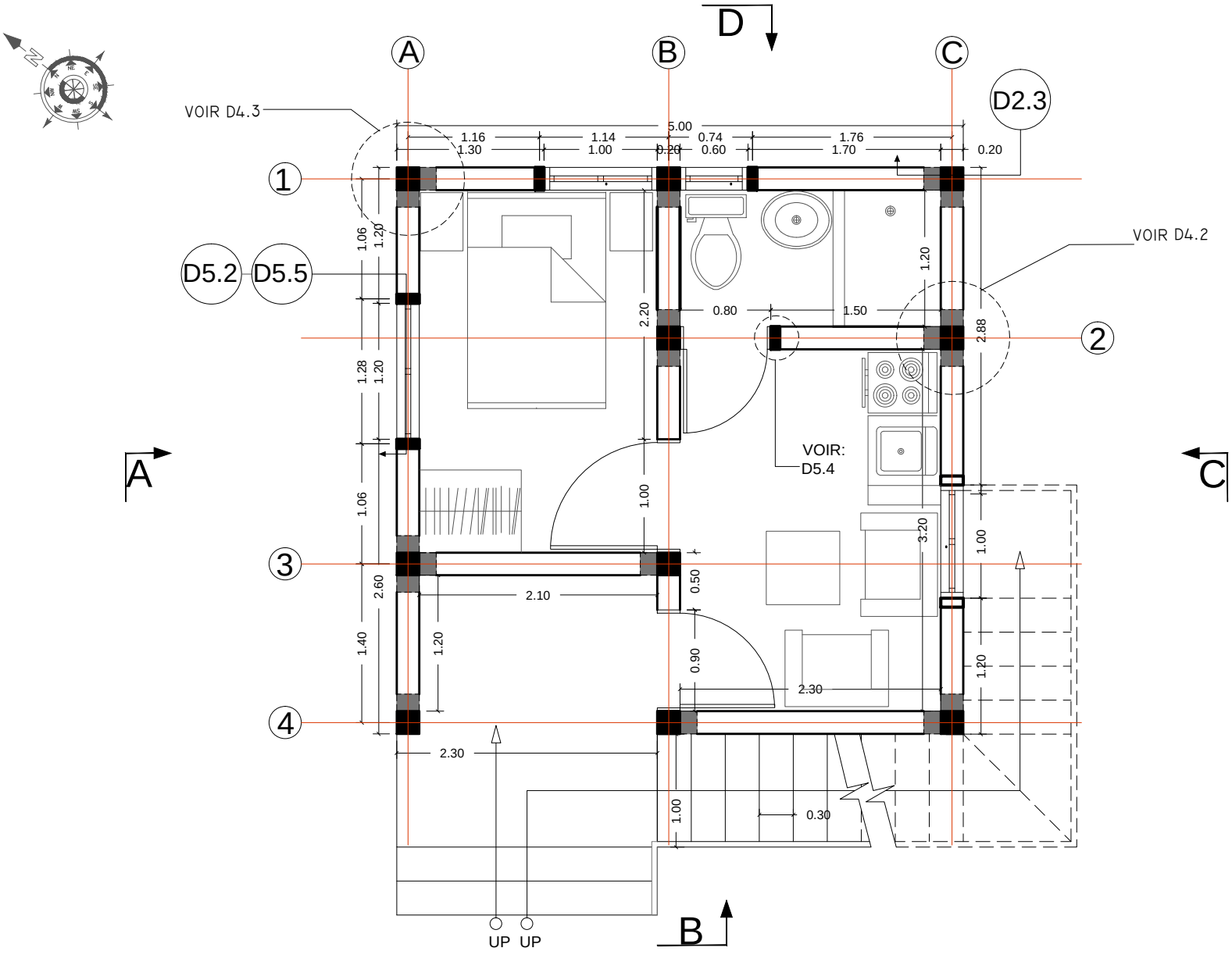

PLAN DE DISTRIBUTION ET D'AMMÉNAGEMENT RDC

ECH.:1/100

build change

MAISON III

PLAN DE DISTRIBUTION ET D'AMMÉNAGEMENT RDC

NOTE:

DATE:16 FÉVRIER 2012

ECH.:1/50

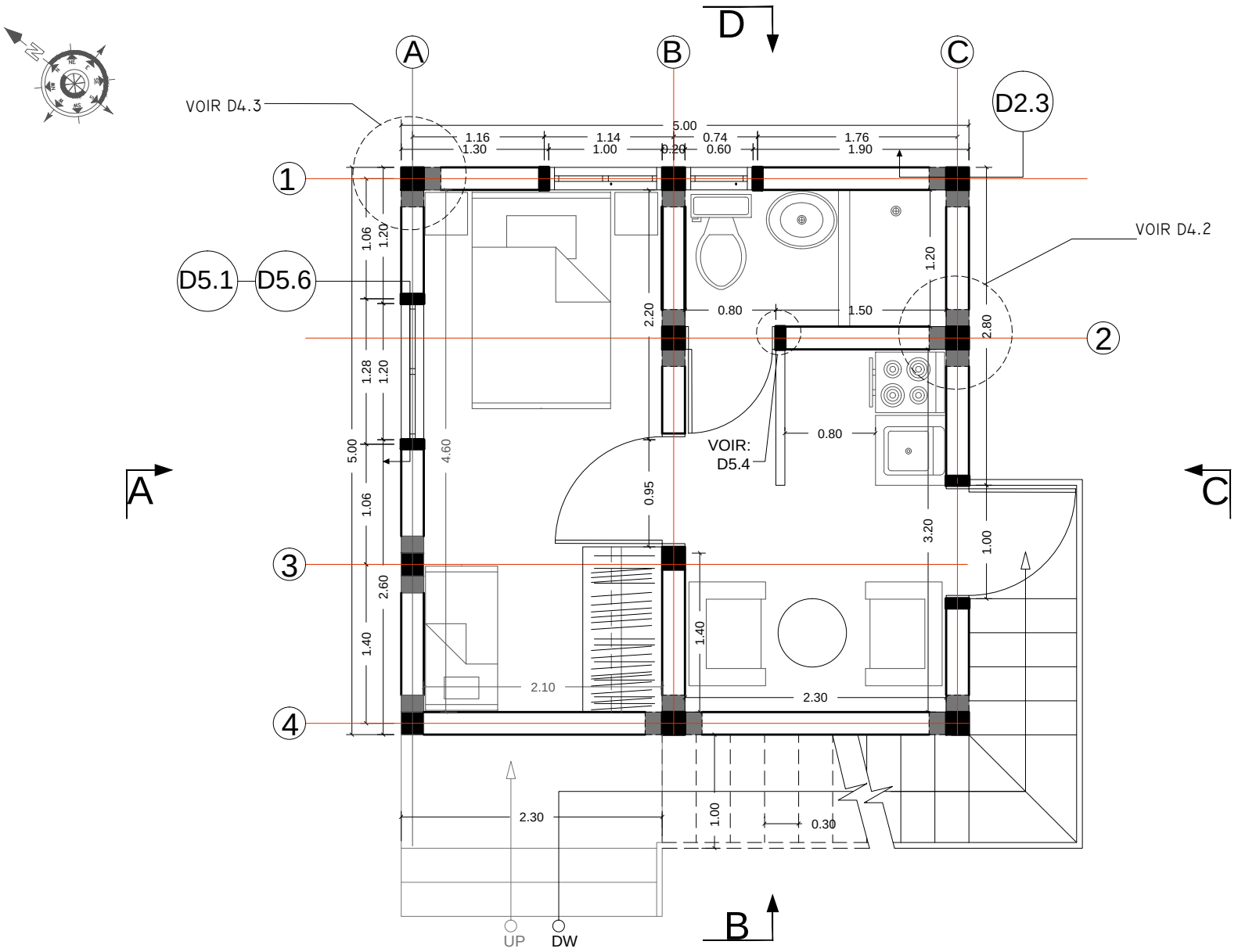

PLAN DE DISTRIBUTION ET D'AMMÉNAGEMENT ÉTAGE
ECH.:1/100

build change

MAISON III

PLAN DE DISTRIBUTION ET D'AMMÉNAGEMENT ÉTAGE

NOTE:

DATE:16 FÉVRIER 2012

ECH.:1/50

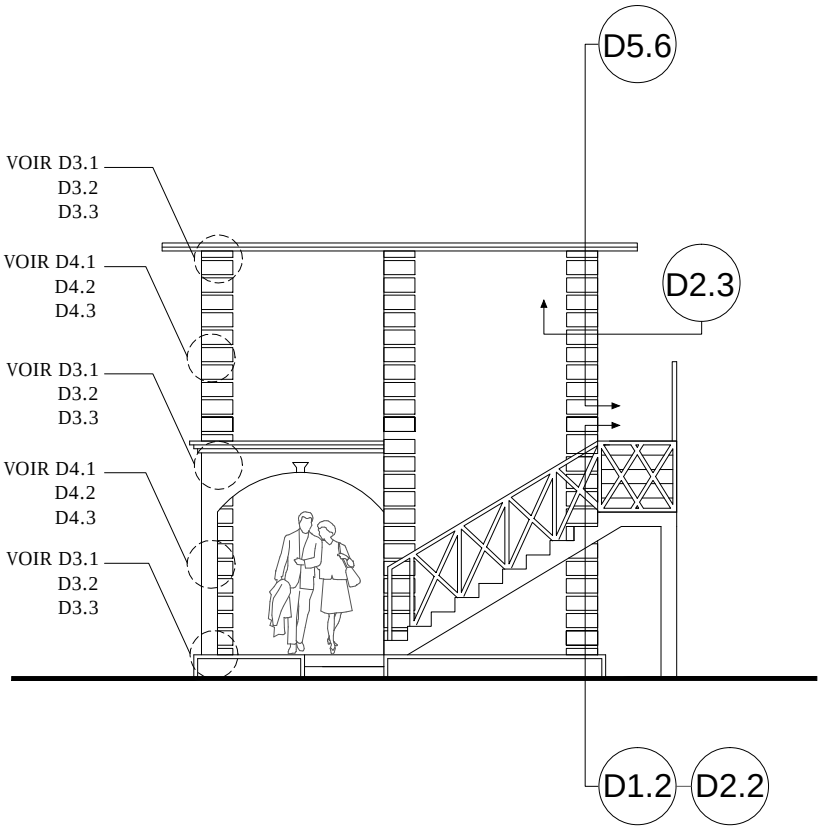

FAÇADE B
ECH.:1/50

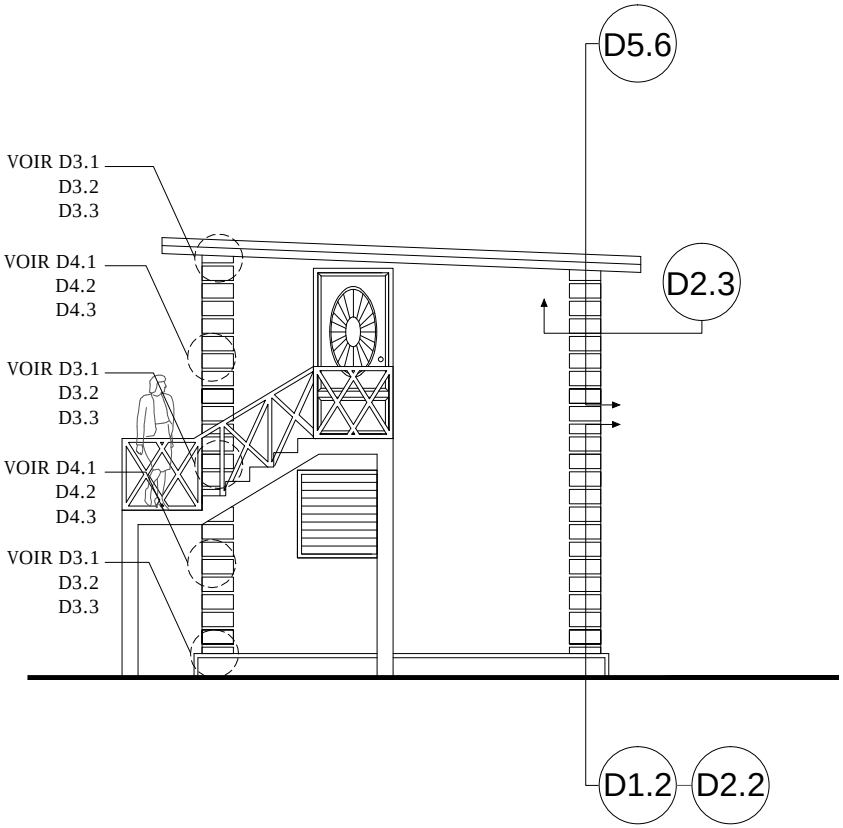

FAÇADE C
ECH.:1/50

build change

MAISON III

FAÇADES

NOTE:

DATE:16 FÉVRIER 2012

ECH.:1/50

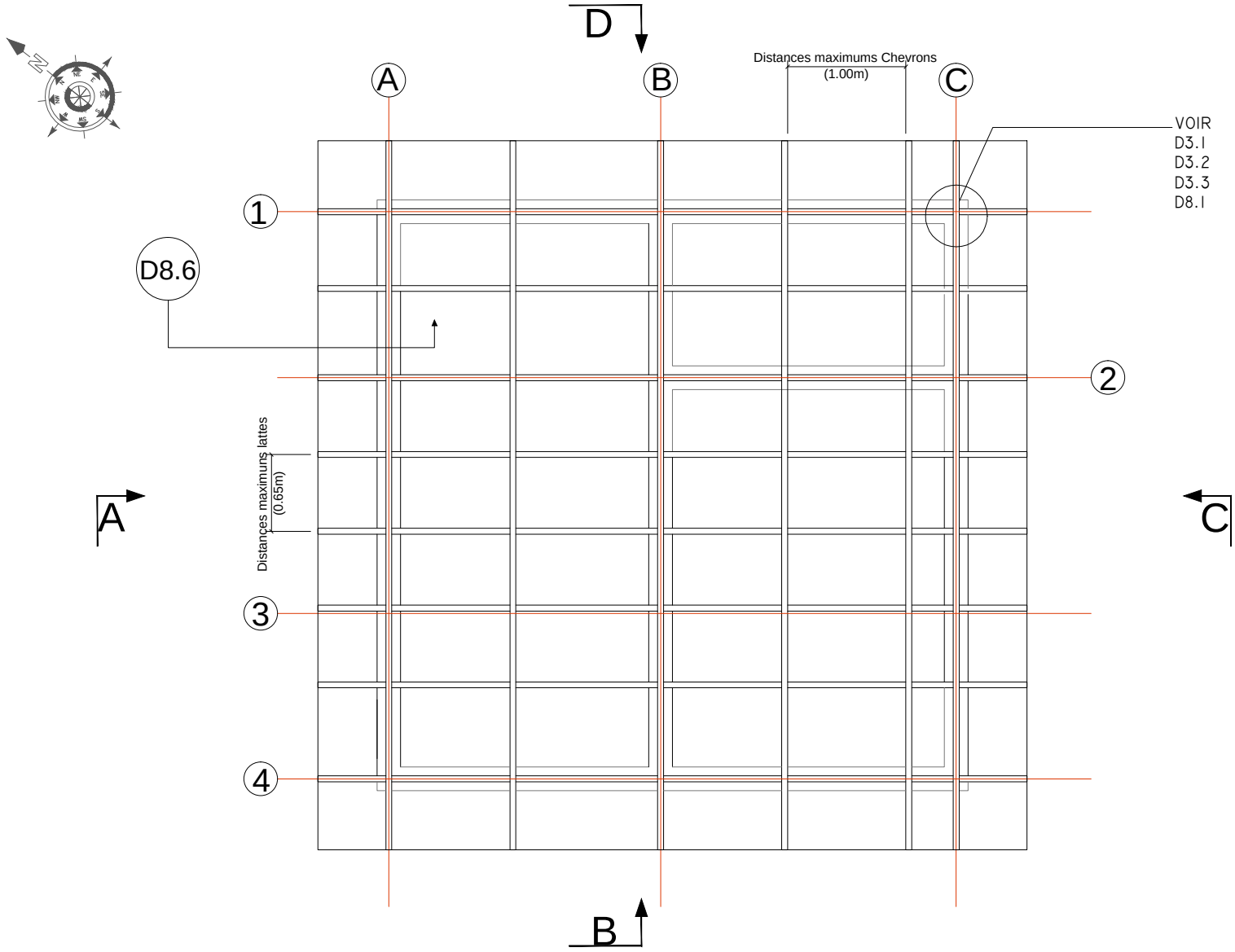

PLAN DE TOITURE

ECH.:1/50

build change

MAISON III

PLAN DE TOITURE LÉGÈRE

NOTE:

DATE:16 FÉVRIER 2012

ECH.:1/50

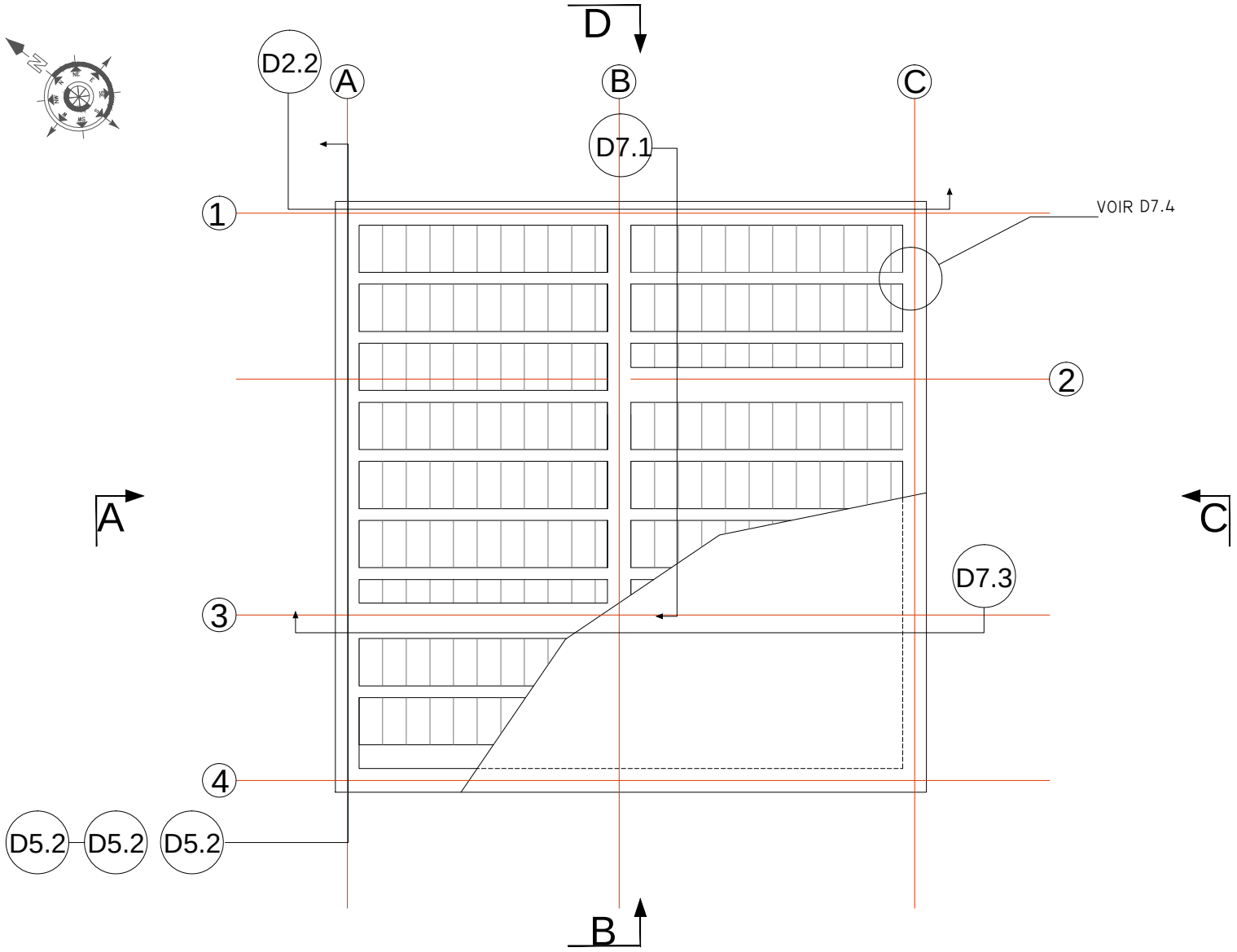

PLAN DALLE

ECH.:1/50

build change

MAISON III

PLAN DALLE

NOTE:

DATE:16 FÉVRIER 2012

ECH.:1/50

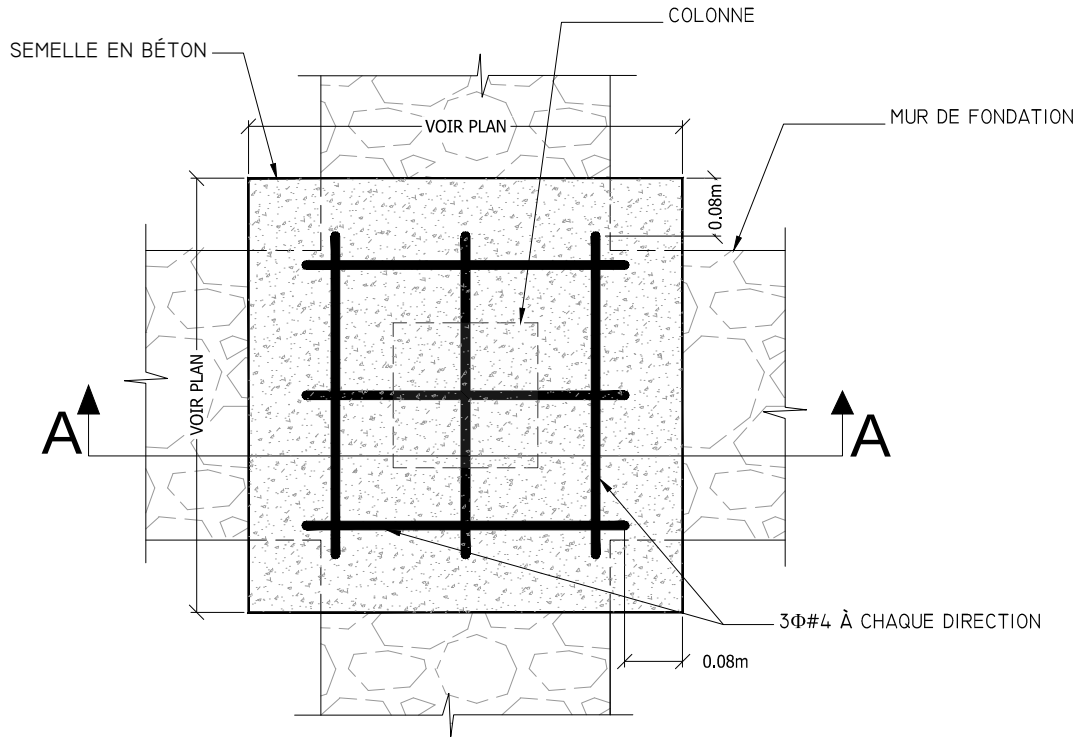

SEMELLE DE BÉTON PLAN
ÉCH.: 1/20

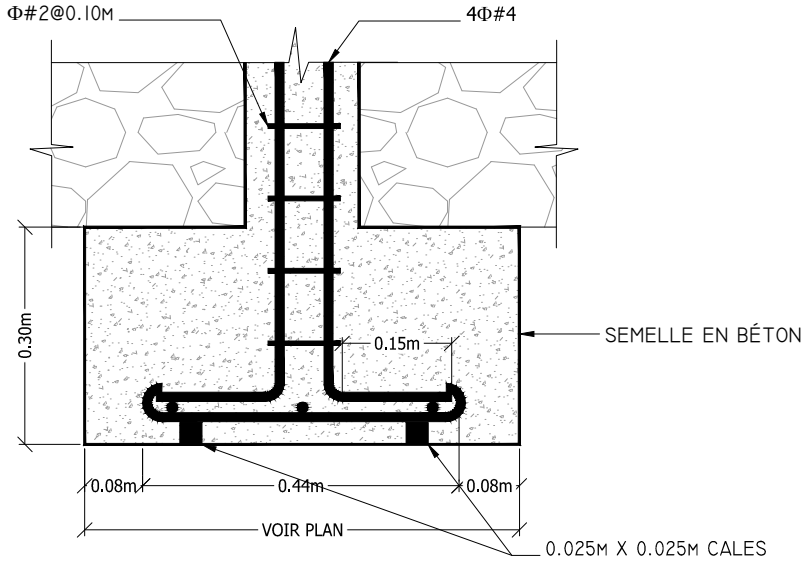

SEMELLE DE BÉTON COUPE A-A
ÉCH.: 1/20

build change

DÉTAILS SEMELLE

D1.1

CROIX ROUGE AMÉRICAINE

PROJET: NOUVELLE CONSTRUCTION

ÉCH.: 1/20

DATE: 8 FÉVRIER 2012

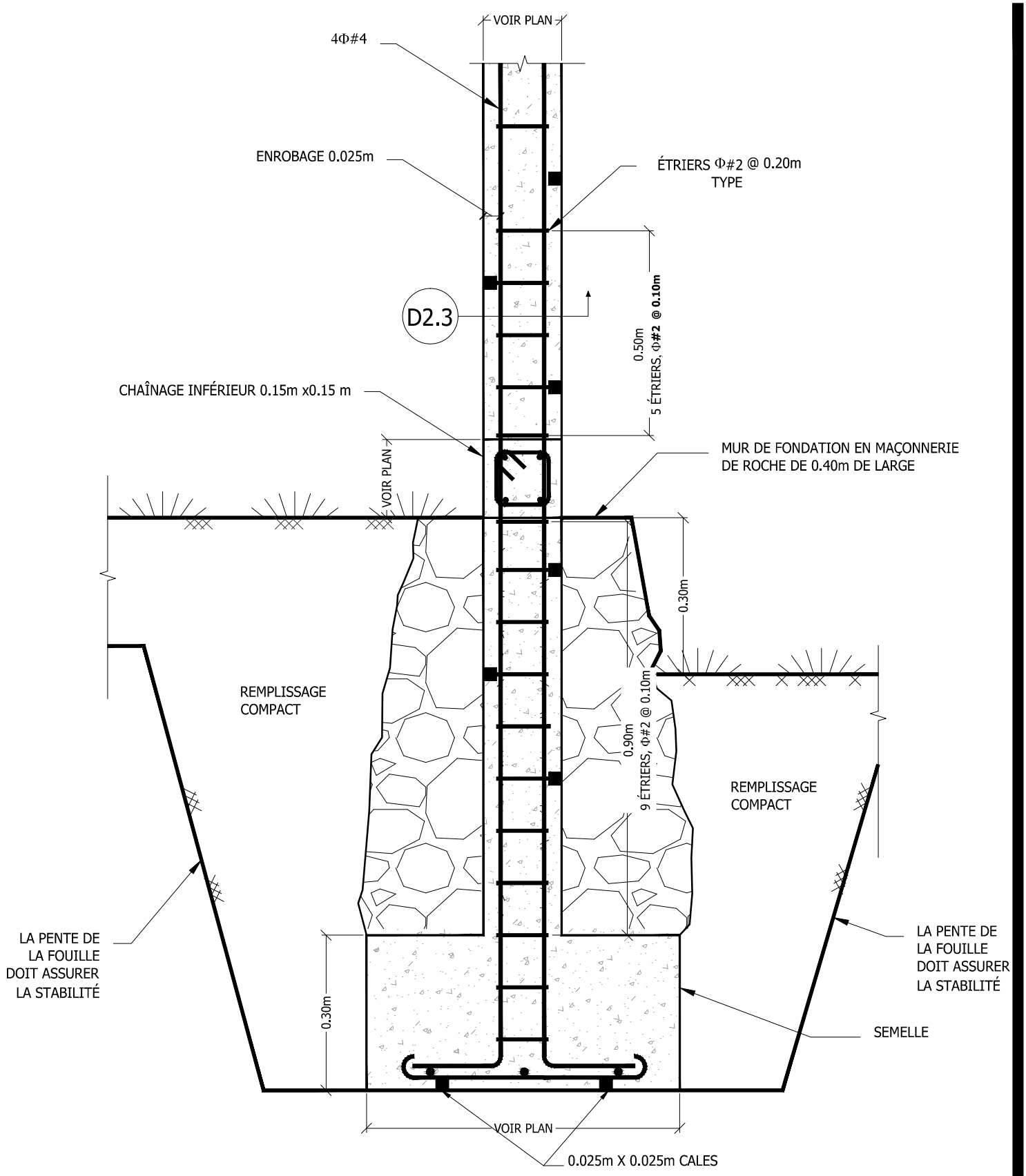

build change

COUPE DES FONDATIONS À TRAVERS LA COLONNE

D1.2

CROIX ROUGE AMÉRICAINE

PROJET: NOUVELLE CONSTRUCTION

ÉCH.: 1/10

DATE: 8 FÉVRIER 2012

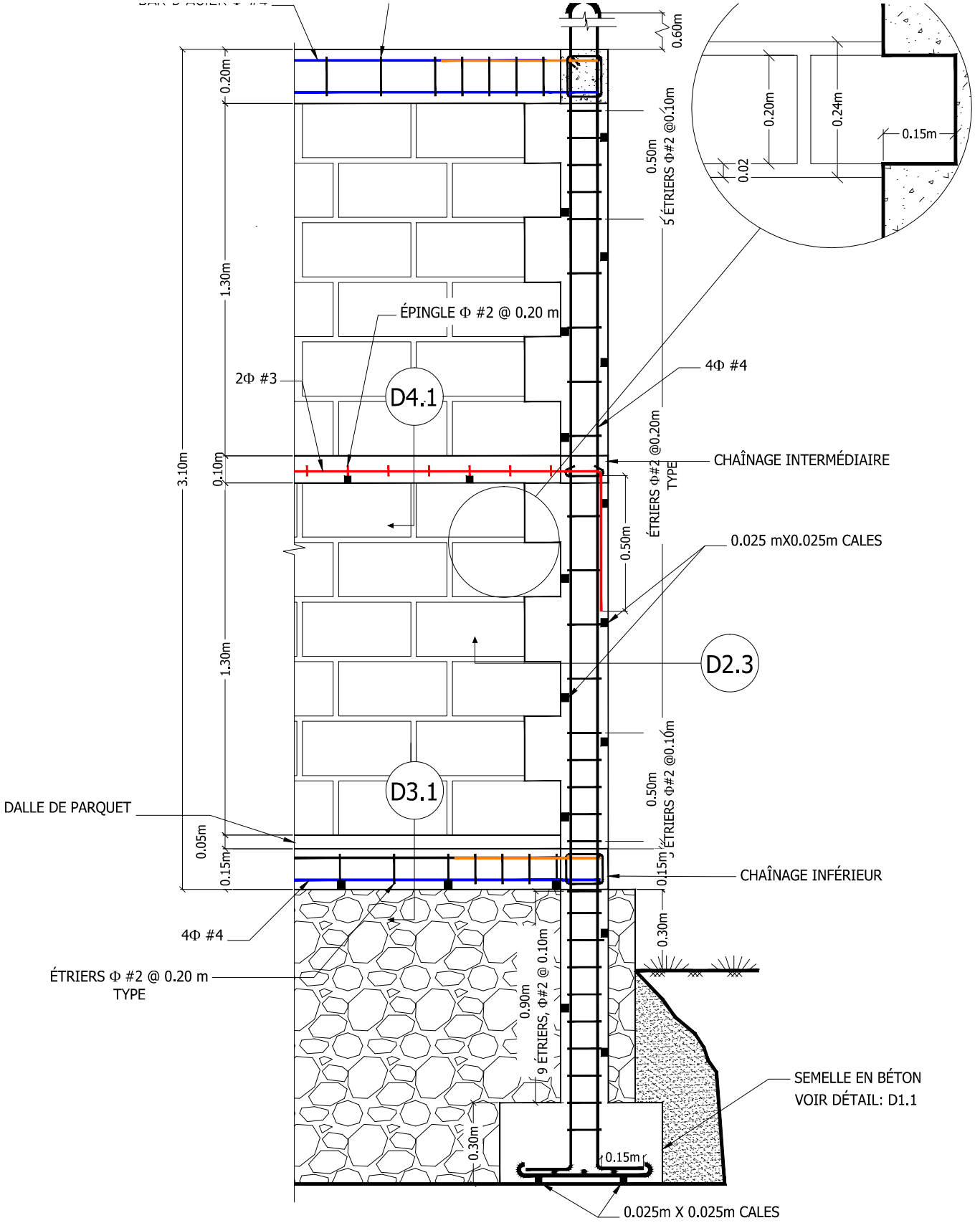

build change

COUPE À TRAVERS COLONNE ET CHAÎNAGES DALLE

CROIX ROUGE AMÉRICAINE

PROJET: NOUVELLE CONSTRUCTION

ÉCH.: 1/20

DATE: 8 FÉVRIER 2012

D2.2

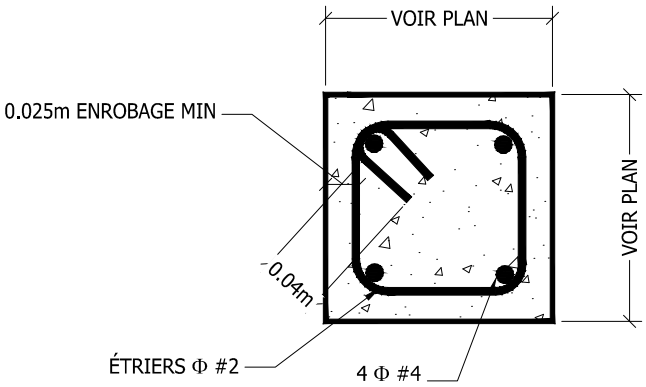

build change

COUPE HORIZONTALE D'UNE COLONNE

D2.3

CROIX ROUGE AMÉRICAINE

PROJET: NOUVELLE CONSTRUCTION

ÉCH.: 1/5

DATE: 8 FÉVRIER 2012

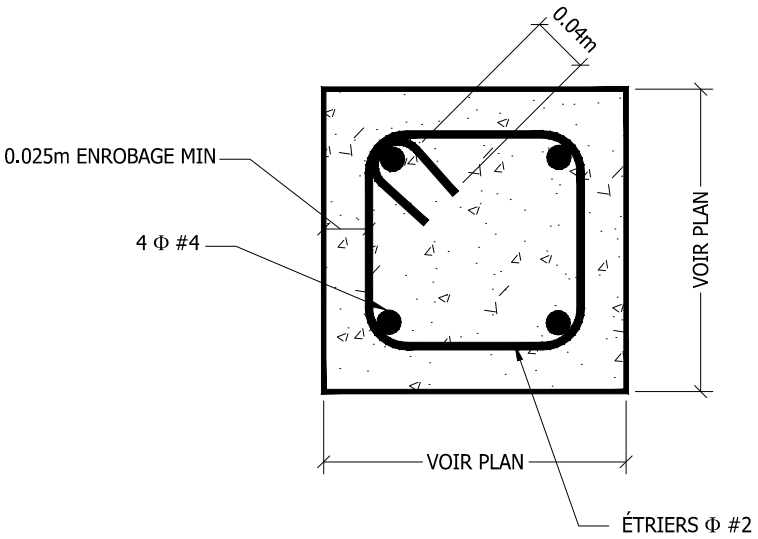

build change

COUPE HORIZONTALE D'UNE COLONNE

CROIX ROUGE AMÉRICAINE

PROJET: NOUVELLE CONSTRUCTION

ÉCH.: 1/5

DATE: 8 FÉVRIER 2012

D2.4

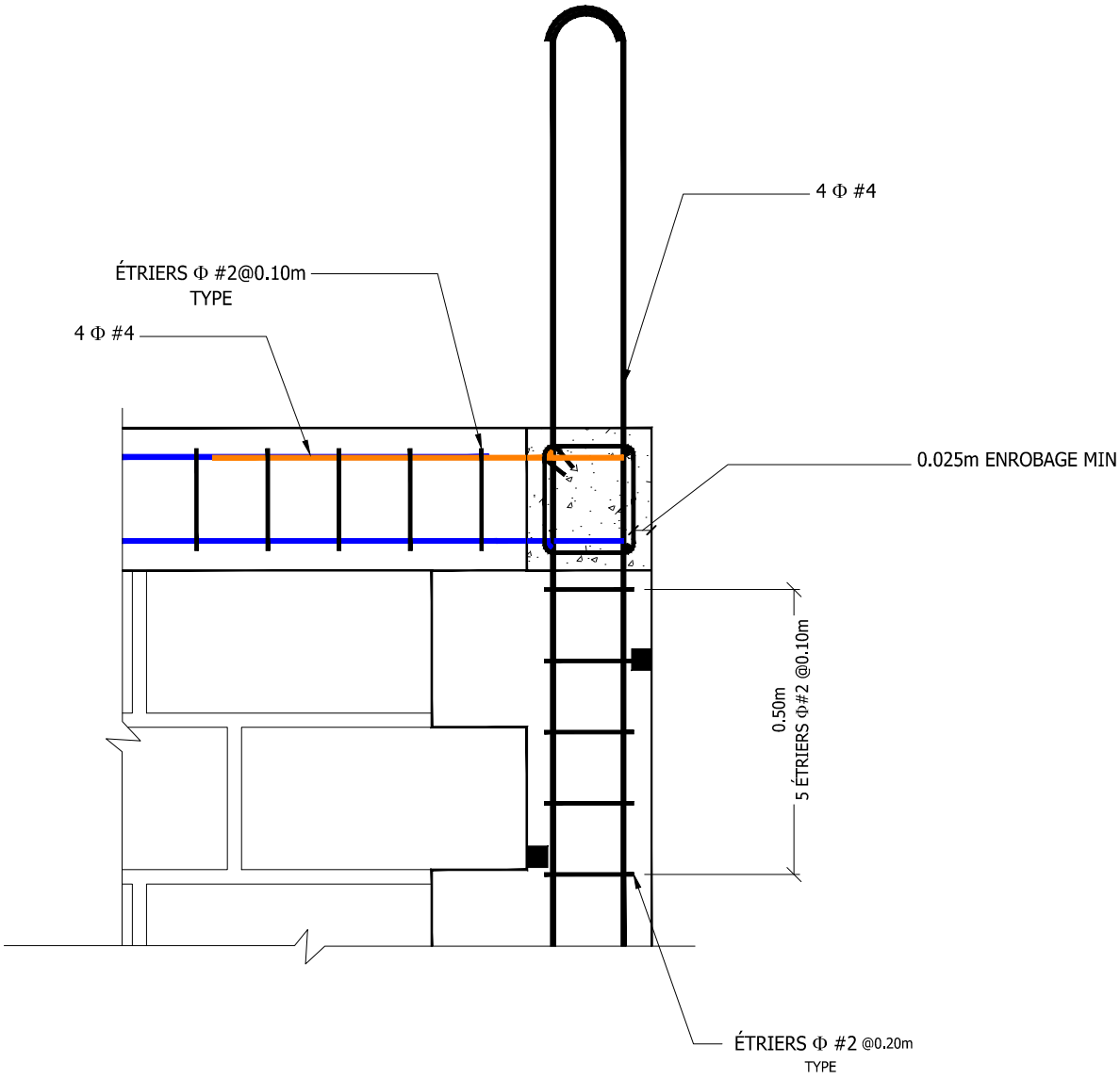

build change

DÉTAIL ATTENTE DALLE

CROIX ROUGE AMÉRICAINE

PROJET: NOUVELLE CONSTRUCTION

ÉCH.: 1/10

DATE: 8 FÉVRIER 2012

D2.5

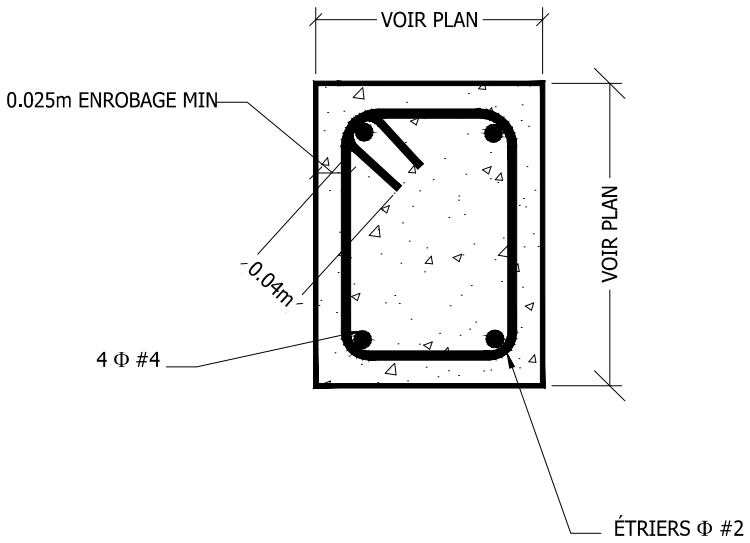

build change

COUPE VERTICALE DU CHAÎNAGE INFÉRIEUR / SUPÉRIEUR

CROIX ROUGE AMÉRICAINE

PROJET: NOUVELLE CONSTRUCTION

ÉCH.: 1/5

DATE: 8 FÉVRIER 2012

D3.1

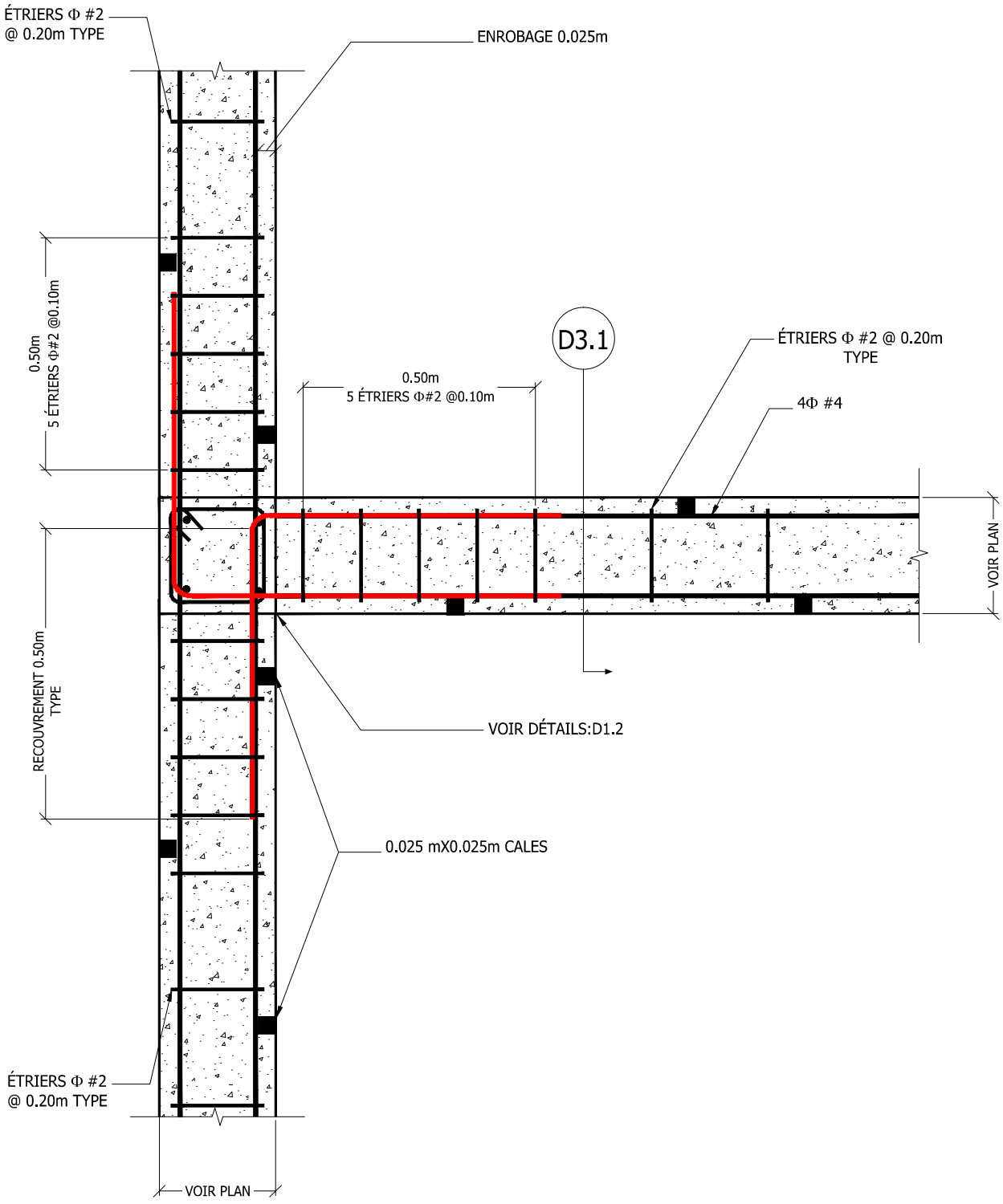

build change

COUPE HORIZONTALE DU CHAÎNAGE INFÉRIEUR / SUPÉRIEUR A L'INTERSECTION DE 3 MURS

D3.2

CROIX ROUGE AMÉRICAINE

PROJET: NOUVELLE CONSTRUCTION

ÉCH.: 1/10

DATE: 8 FÉVRIER 2012

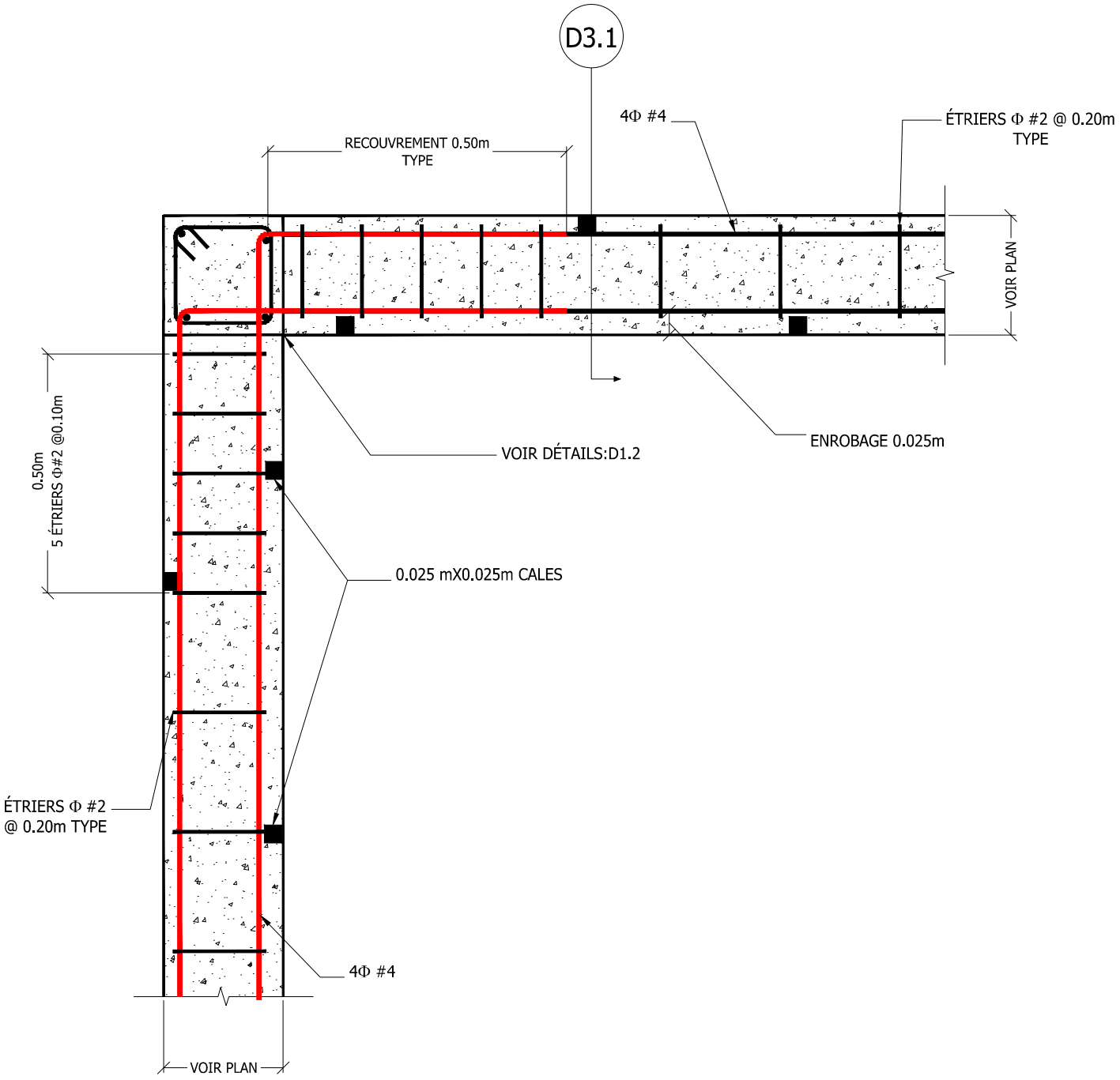

build change

COUPE HORIZONTALE DU CHAÎNAGE INFÉRIEUR AUX ANGLES

CROIX ROUGE AMÉRICAINE

PROJET: NOUVELLE CONSTRUCTION

ÉCH.: 1/10

DATE: 8 FÉVRIER 2012

D3.3

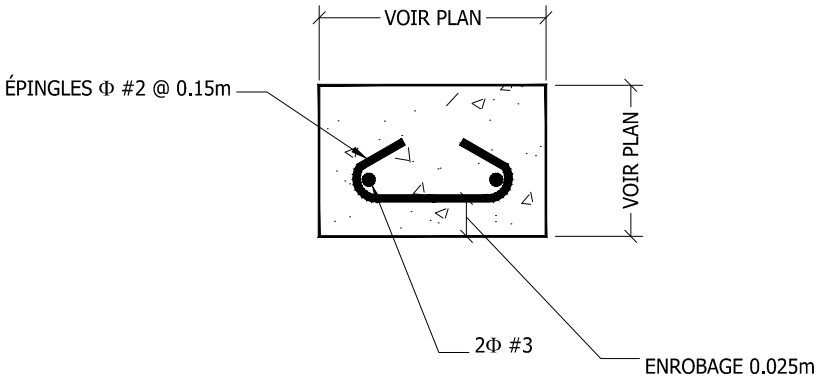

build change

COUPE VERTICALE DU CHAÎNAGE INTERMÉDIAIRE

D4.1

CROIX ROUGE AMÉRICAINE

PROJET: NOUVELLE CONSTRUCTION

ÉCH.: 1/5

DATE: 8 FÉVRIER 2012

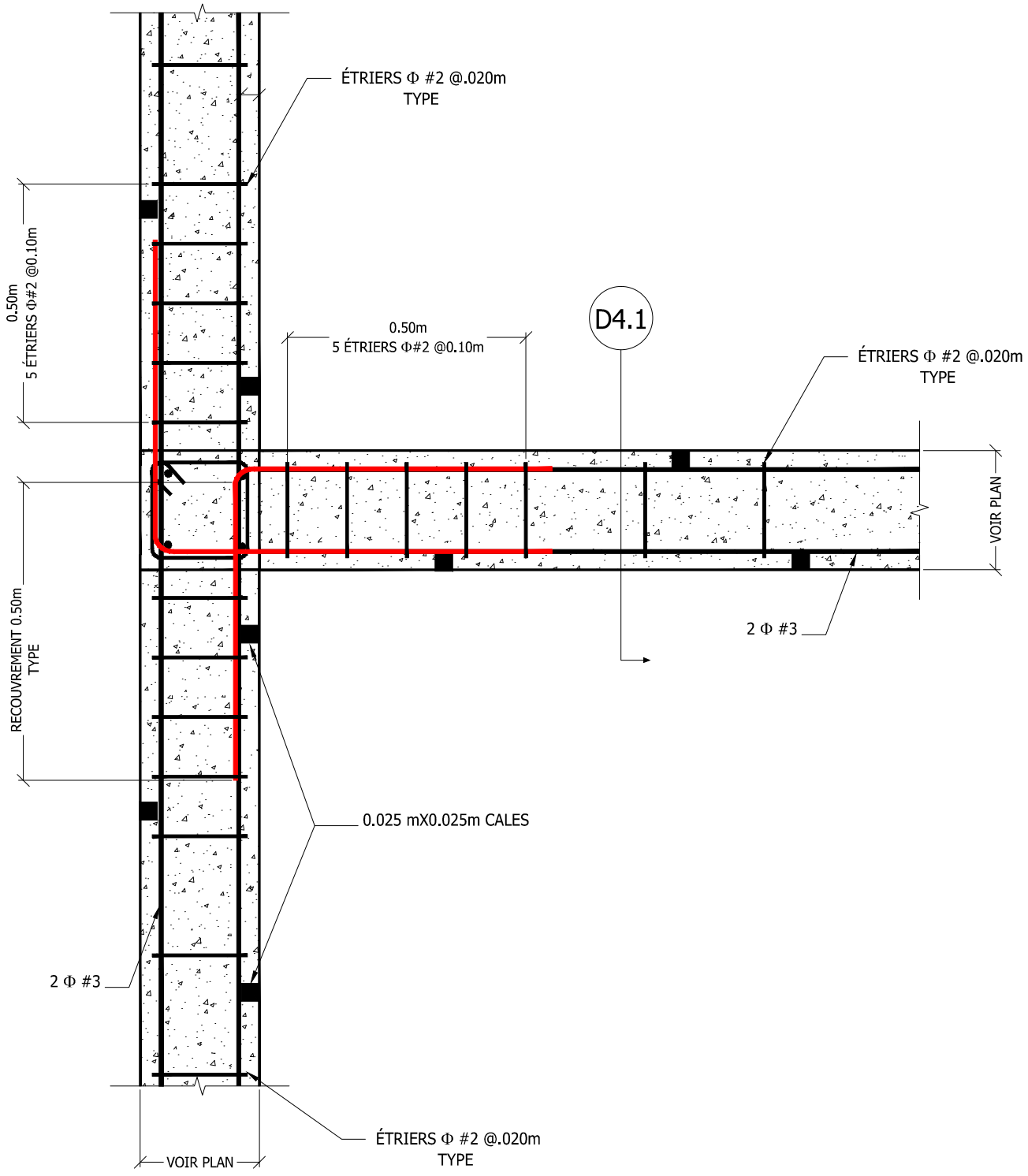

build change

COUPE DU CHAÎNAGE INTERMÉDIAIRE A L'INTERSECTION DE 3 MURS

CROIX ROUGE AMÉRICAINE

PROJET: NOUVELLE CONSTRUCTION

ÉCH.: 1/5

DATE: 8 FÉVRIER 2012

D4.2

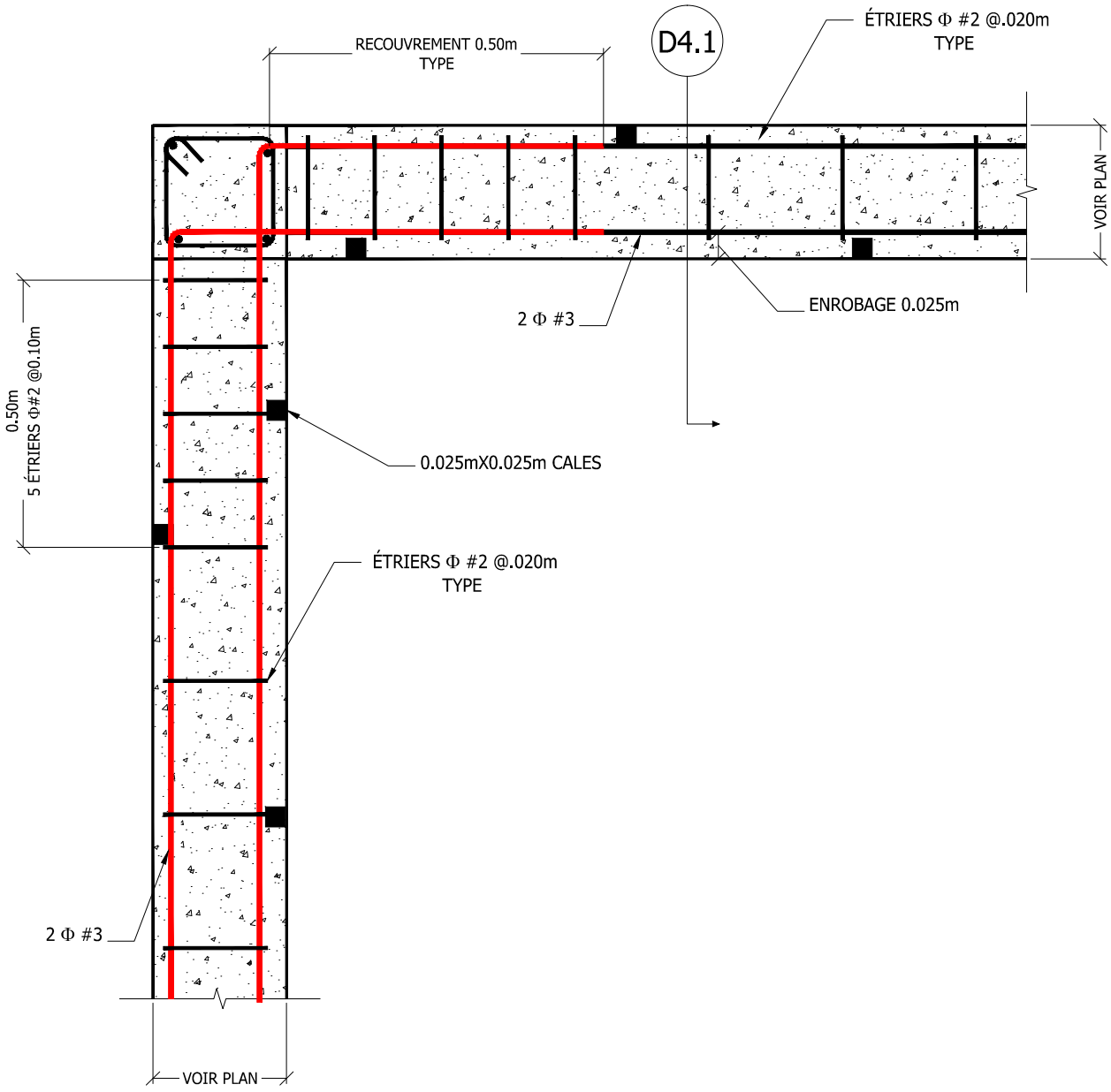

COUPE DU CHAÎNAGE INTERMÉDIAIRE AUX ANGLES

CROIX ROUGE AMÉRICAINE

PROJET: NOUVELLE CONSTRUCTION

ÉCH.: 1/5

DATE: 8 FÉVRIER 2012

D4.3

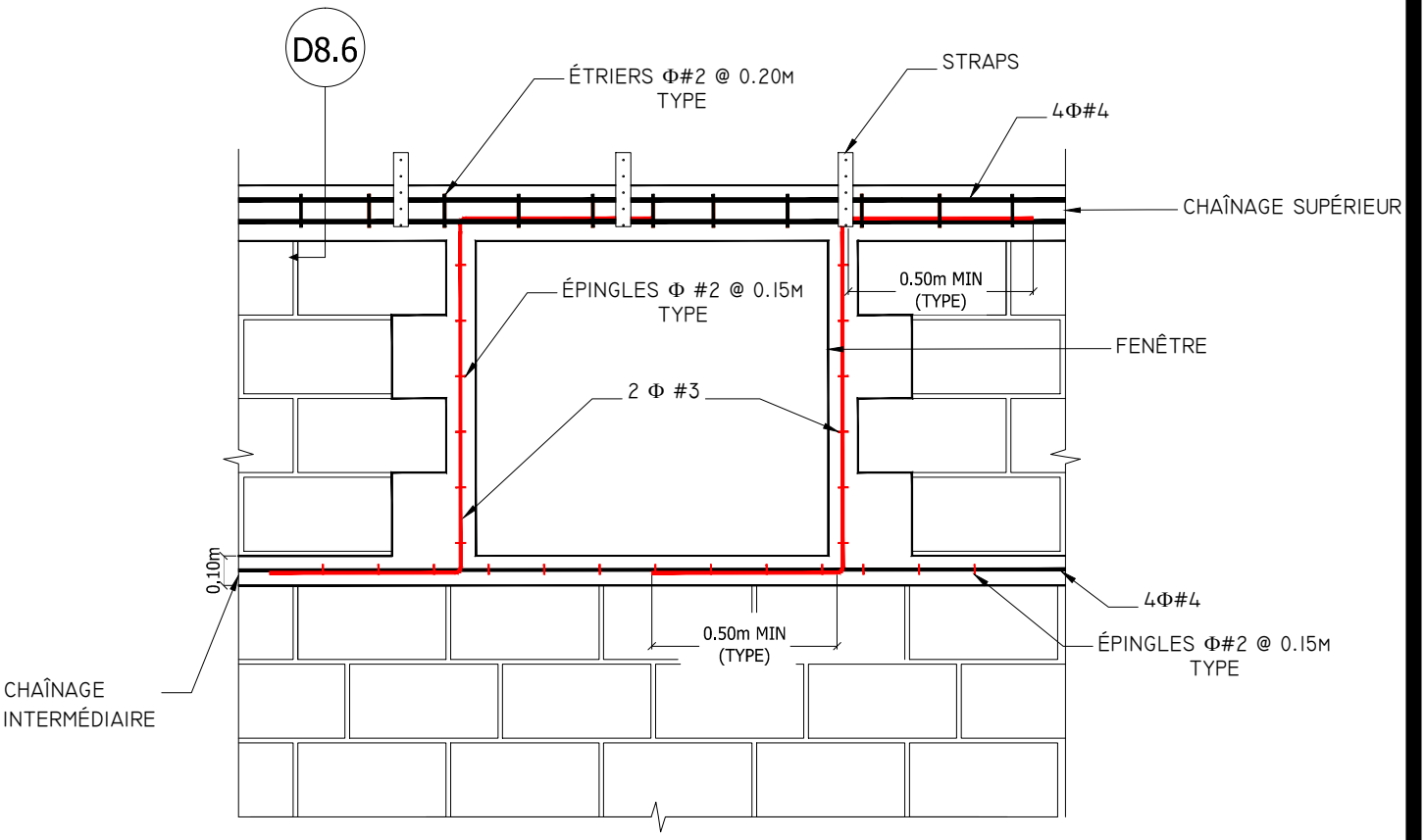

build change

ARMATURE AUX OUVERTURES DES FENÊTRES, TOITURE LÉGÈRE

CROIX ROUGE AMÉRICAINE

PROJET: NOUVELLE CONSTRUCTION

ÈCH.: 1/20

DATE: 8 FÉVRIER 2012

D5.1

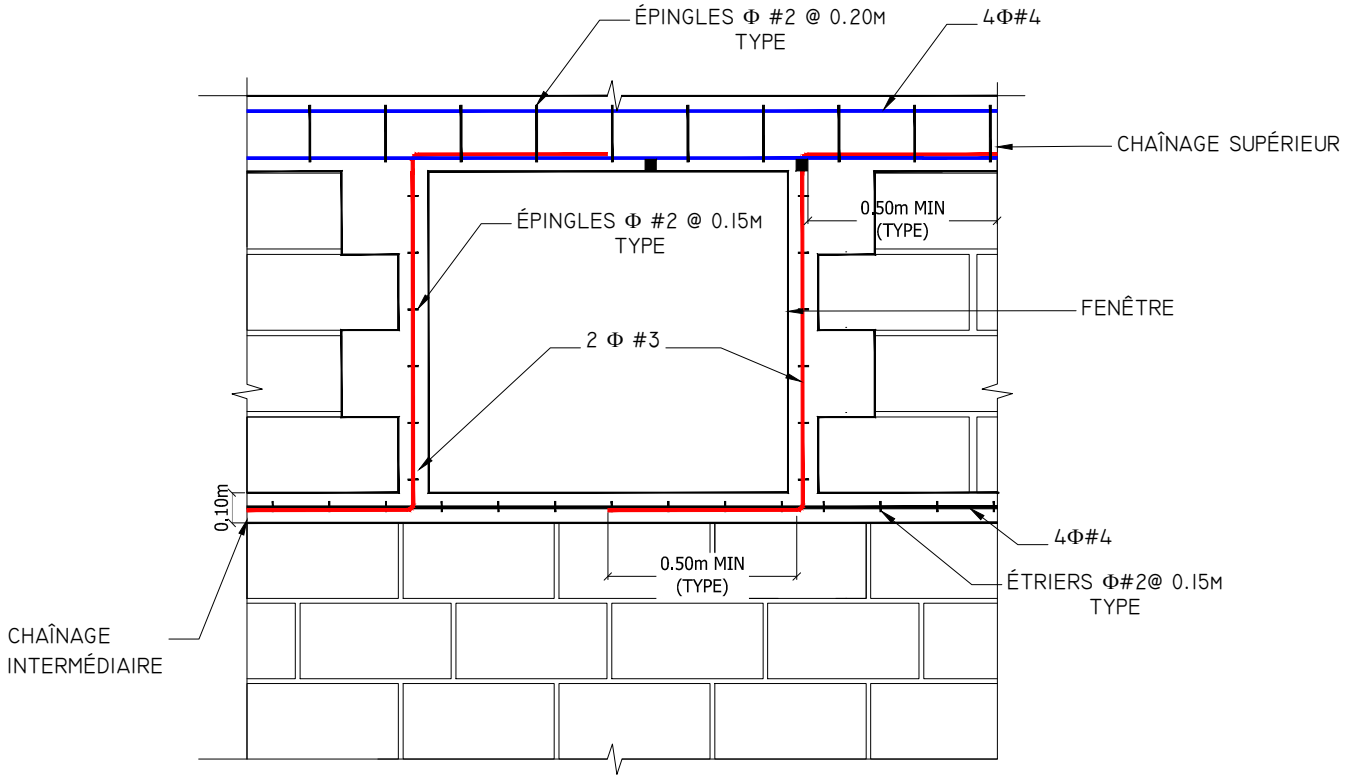

build change

ARMATURE AUX OUVERTURES DES FENÊTRES, DALLE

CROIX ROUGE AMÉRICAINE

PROJET: NOUVELLE CONSTRUCTION

ÈCH.: 1/5

DATE: 8 FÉVRIER 2012

D5.2

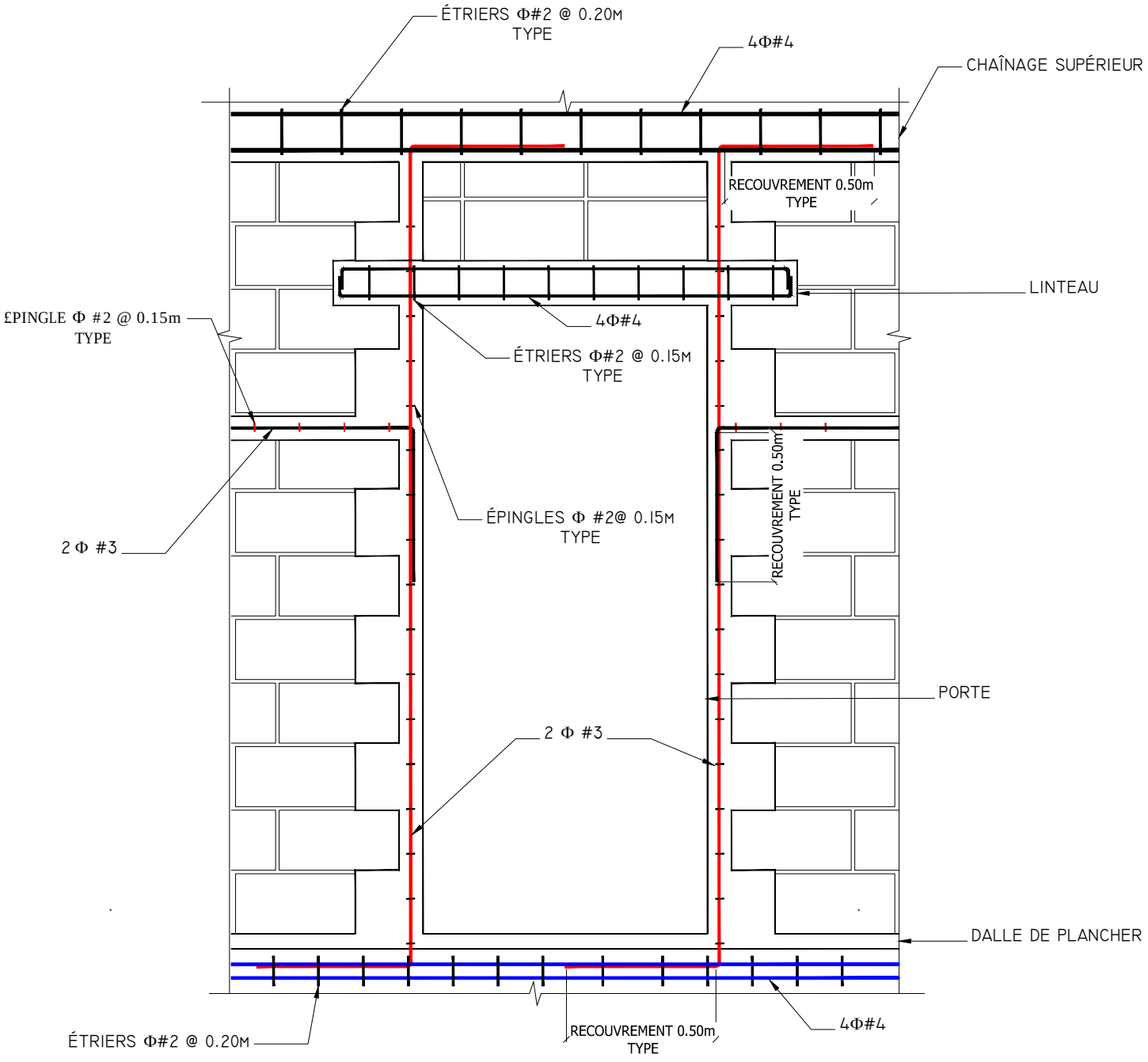

build change

ARMATURE AUX OUVERTURES DES PORTES, DALLE

CROIX ROUGE AMÉRICAINE

PROJET: NOUVELLE CONSTRUCTION

ÈCH.: 1/5

DATE: 8 FÉVRIER 2012

D5.4

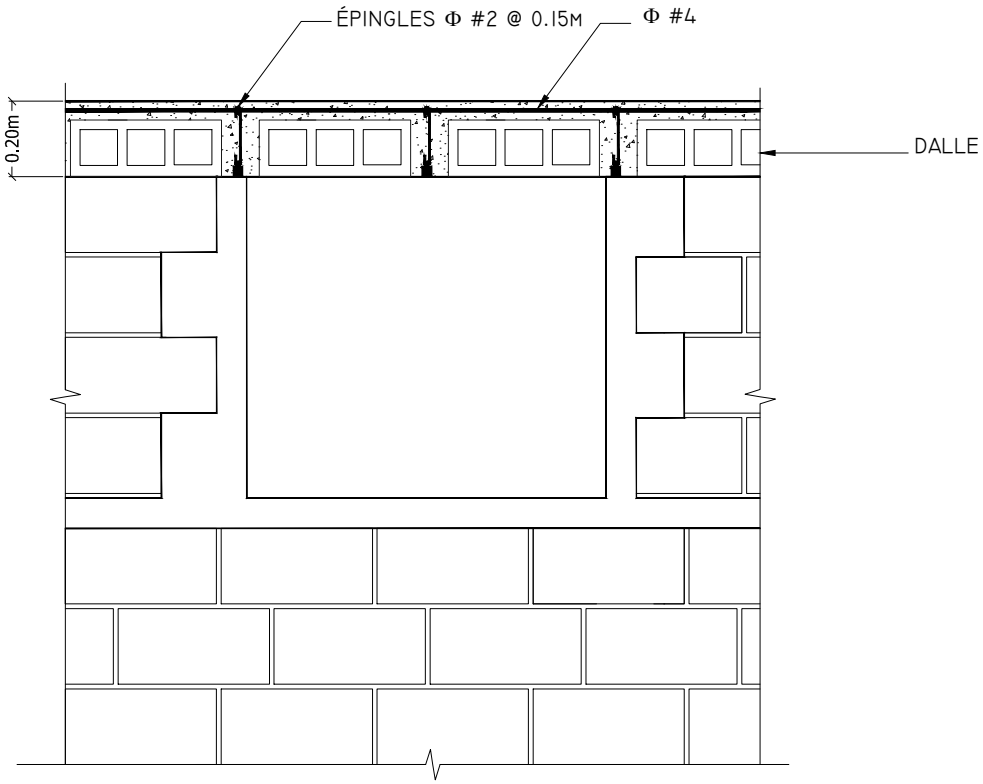

build change

COUPE SUR DALLE AVEC VUE SUR FENÊTRE

D5.5

CROIX ROUGE AMÉRICAINE

PROJET: NOUVELLE CONSTRUCTION

ÈCH.: 1/5

DATE: 8 FÉVRIER 2012

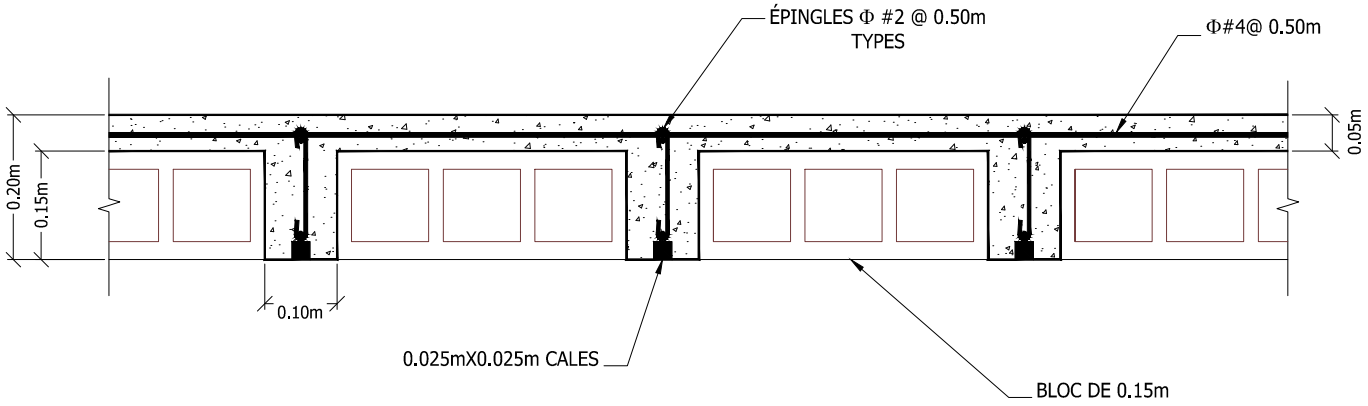

build change

COUPE DE TOITURE EN BÉTON

D7.1

CROIX ROUGE AMÉRICAINE

PROJET: NOUVELLE CONSTRUCTION

ÉCH.: 1/10

DATE: 8 FÉVRIER 2012

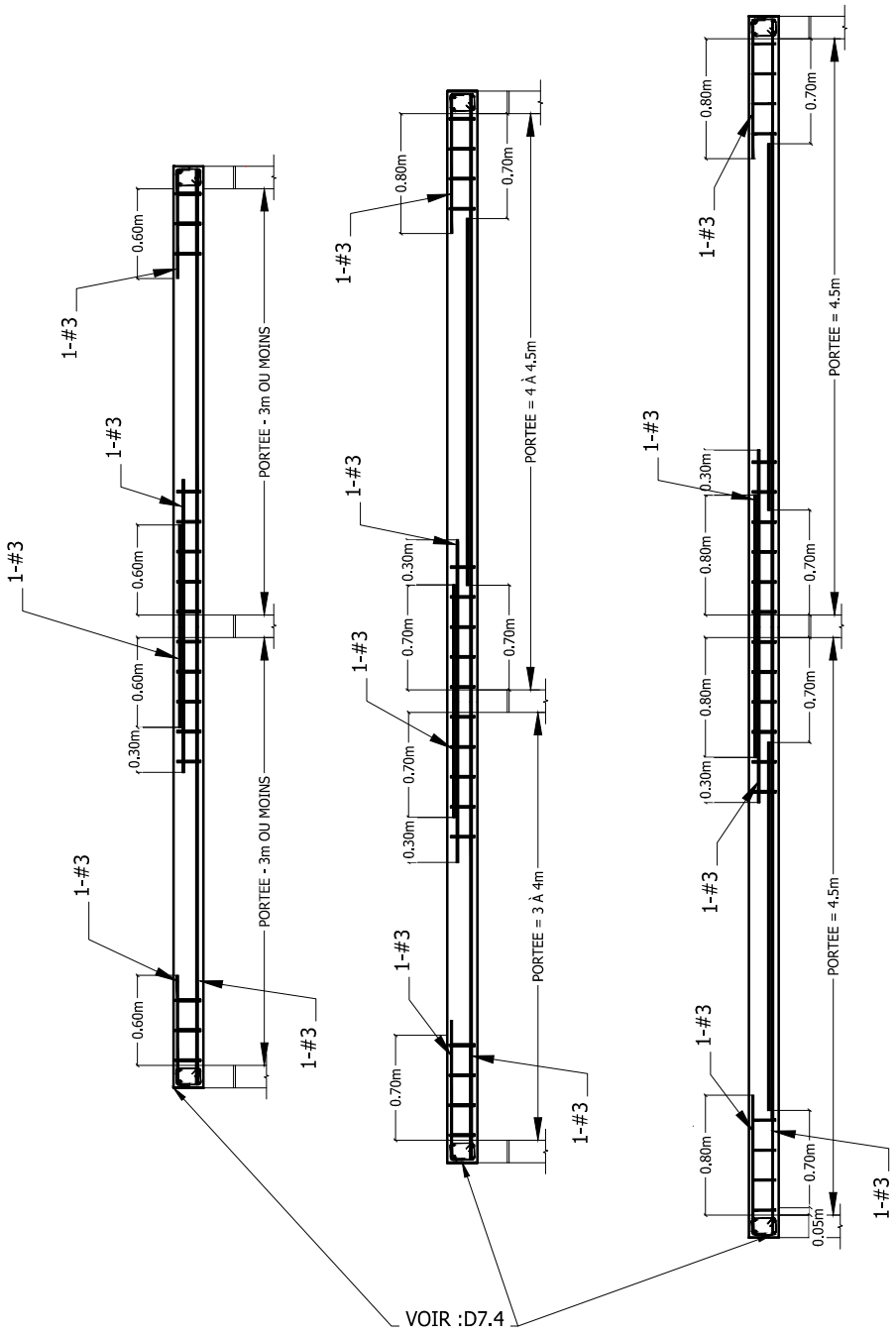

build change

ARMATURE DE POUTRELLE DE PORTÉE DOUBLE

CROIX ROUGE AMÉRICAINE

PROJET: NOUVELLE CONSTRUCTION

ÈCH.: 1/5

DATE: 8 FÉVRIER 2012

D7.3

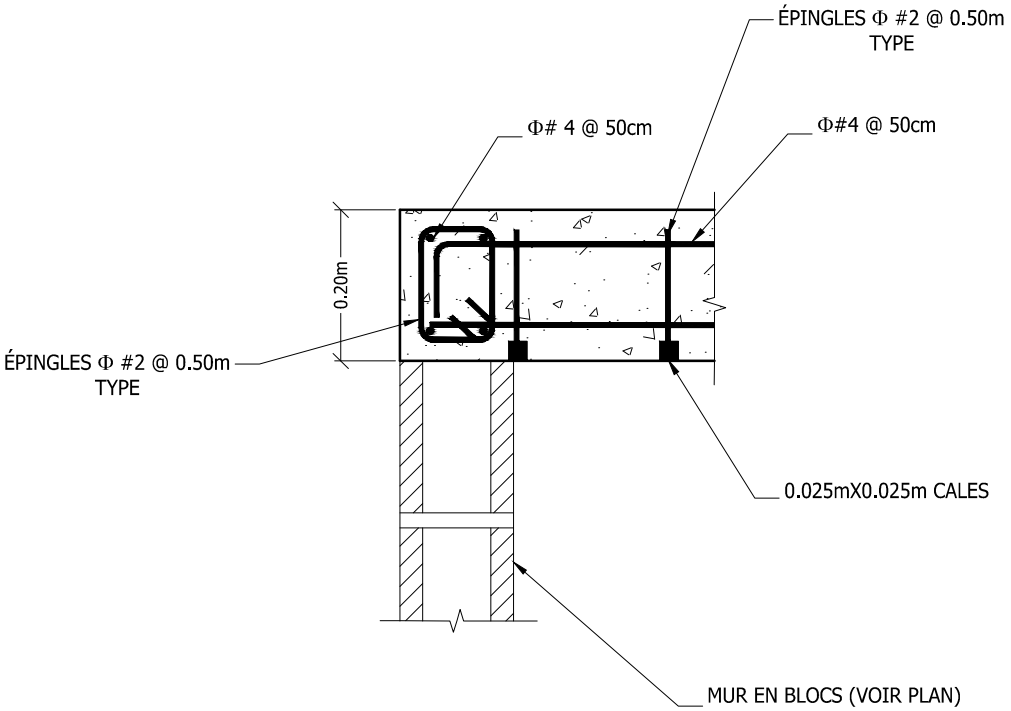

build change

CONNEXION CHAÎNAGE SUPÉRIEUR ET POUTRELLE

D7.4

CROIX ROUGE AMÉRICAINE

PROJET: NOUVELLE CONSTRUCTION

ÉCH.: 1/10

DATE: 8 FÉVRIER 2012

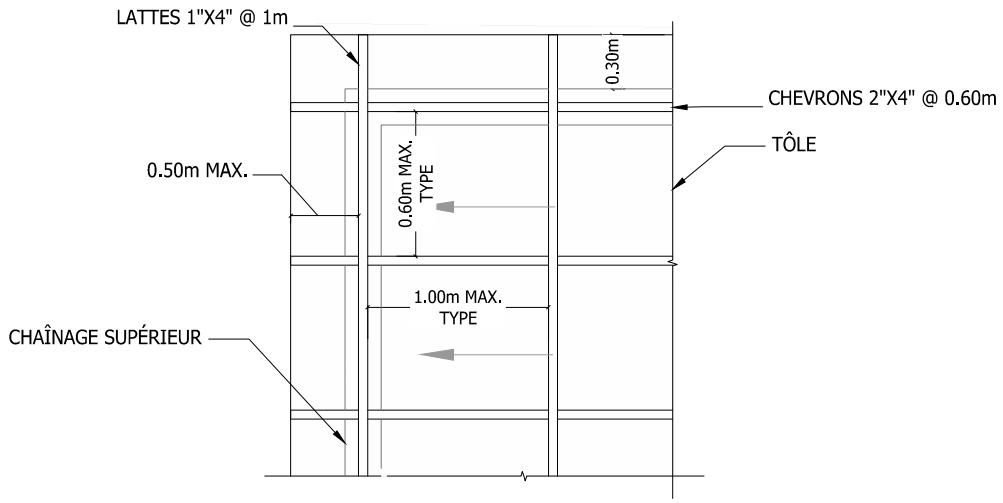

PLAN
ÉCH.: 1/40

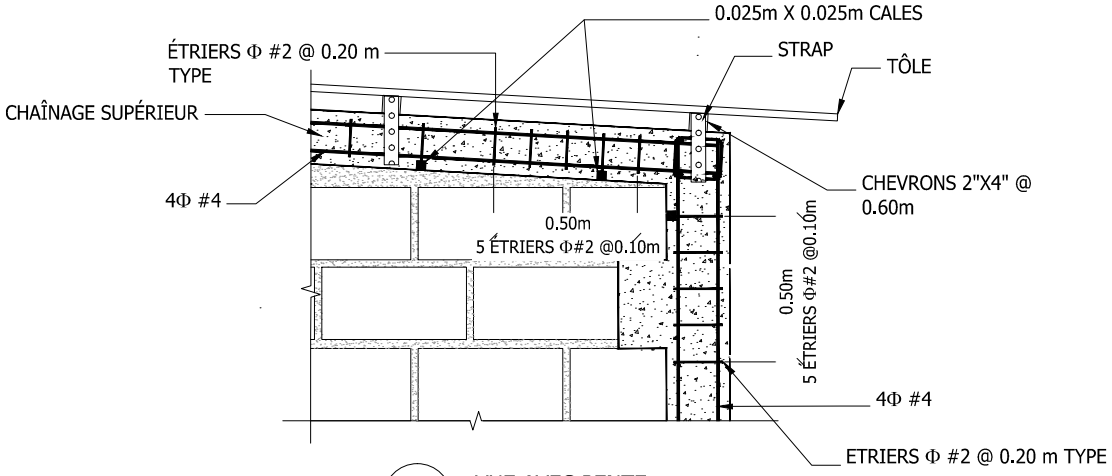

VUE AVEC PENTE
ÉCH.: 1/20

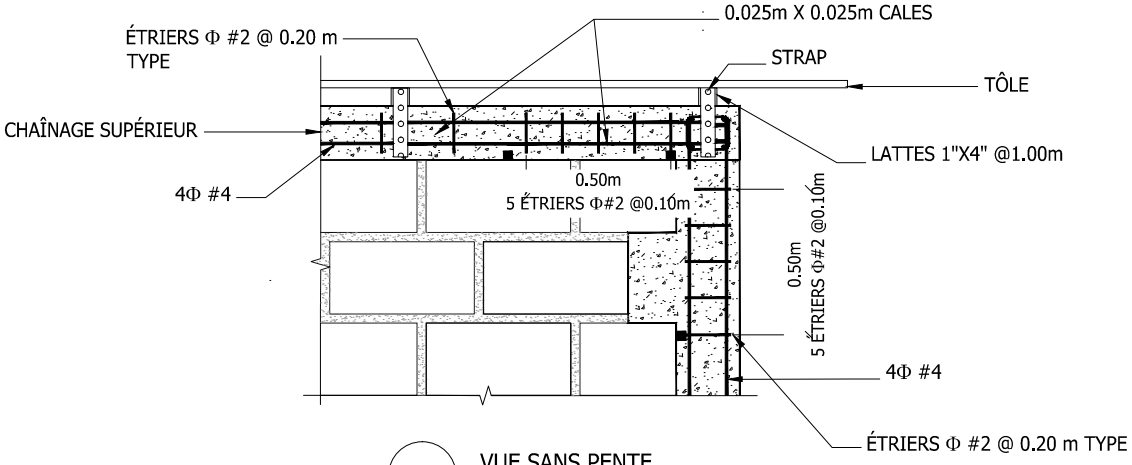

VUE SANS PENTE
ÉCH.: 1/20

build change

DÉTAILS DE LA CHARPENTE DU TOIT SIMPLE BATIÈRE

CROIX ROUGE AMÉRICAINE

PROJET: NOUVELLE CONSTRUCTION

ÉCH.: 1/INDIQUÉE

DATE: 8 FÉVRIER 2012

D8.1

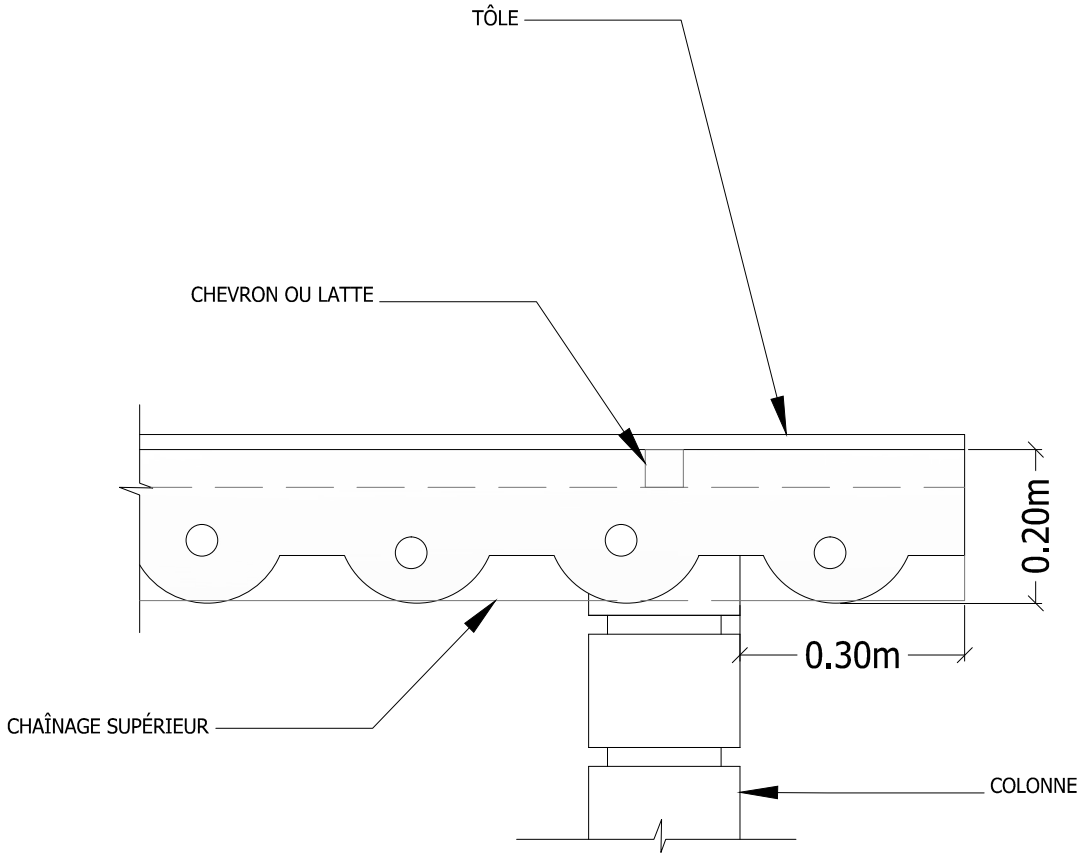

build change	DÉTAILS DENTELLE TOITURE	D8.5
CROIX ROUGE AMÉRICAINE	PROJET: NOUVELLE CONSTRUCTION	
	ÈCH.: 1/20	DATE: 8 FÉVRIER 2012

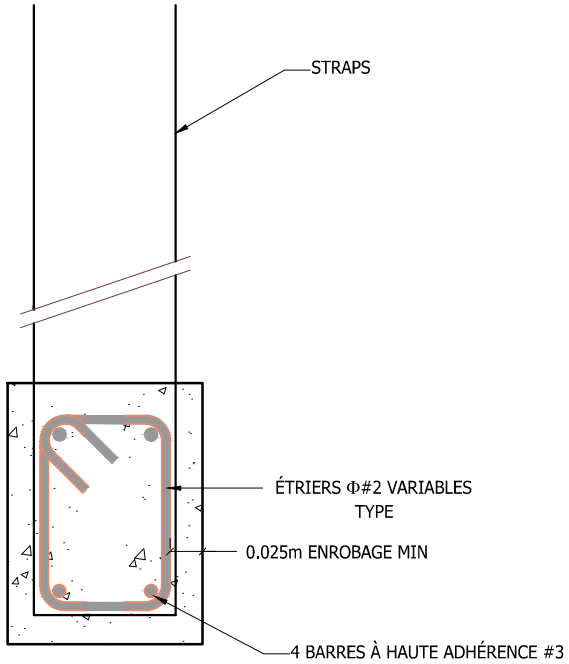

COUPE SUR D5.1

ÉCH.: 1/5

build change

COUPE DE DÉTAIL DU CHAÎNAGE SUPÉRIEUR

CROIX ROUGE AMÉRICAINE

PROJET: NOUVELLE CONSTRUCTION

ÉCH.: 1/5

DATE: 8 FÉVRIER 2012

D8.6

Devis Estimatif

Build Change Post-Earthquake Technical Assistance Program, Haiti

Last Updated: 12-Sep-11

Note: All data should be entered on this page and will automatically be populated on other sheets.

Proprietaire:	ARC	**Date:**	16-Feb-12
Addresse:	Maison 3(RDC)	**Ingenieur:**	SELOIS Kervens
GPS:	so	**Surface de la maison (m^2):**	25
Telephone:	so		

PHASE 0: Preparation du Site			**No.**	**Unit**
A: Demolition				
Item	**Description**	**Column1**	**QTY**	**UNIT**
1	Enlevement d'une toiture legere	surface du plan =		m^2
2	Demolition d'une toiture lourde	surface du plan =		m^2
3	Demolition des murs et colonnes	surface des murs =		m^2
4	Demolition d'une dalle non armee	surface du plan =		m^2
5	Demolition de la fondation	longuer des murs =		m
B: Deblaiement du site				
1	Ramassage de la demolition	surface du plan =		m^2
2	Ramassage des ordures	surface du site =		m^2
3	Enlevement des arbres (preference a les laisser), arbustes, herbe, etc	surface en herbe =		m^2

PHASE 1: Foundation			**No.**	**Unit**
A: Foundation				
1	Semelle courante	Longeur=		m
2	Semelle pour colonne autoportante	Nombre=	11	
3	Murs de fondation en roche	Longeur=	30	m
4	Murs de fondation en beton cyclopeen	Longeur=		m
B: Chainage Inferieur				
1	20cm x 15cm Chainage Inferieur (1:2:4)	Longeur=	30	m
2	25cm x 20cm Chainage Inferieur(1:2:4)	Longeur=		m
3	30cm x 20cm Chainage Inferieur (1:2:4)	Longeur=		m

PHASE 2: Murs, Colonnes, Chainages	**No.**	**Unit**

A: Walls				
1	Murs bloc 15cm	surface des murs =		m2
2	Murs bloc 20cm	surface des murs =	63	m2
B: Colonnes en Beton				
0	Nombre de colonnes	Nombre=	11	
1	Colonnes 15cm x 15cm (1:2:4)	Longeur=		m
2	Colonnes 20cm x 20cm (1:2:4)	Longeur=	4.5	m
3	Colonnes 25cm x 25cm (1:2:4)	Longeur=		m
C: Chainage Intermediare				
1	15cm x 10cm Chainage intermediare (1:2:4)	Longeur=	25.6	m
2	20cm x 10cm Chainage intermediare (1:2:4)	Longeur=		m
D: Ouvertures				
1	Portes	Nombre=	4	
	Hauteur (jusqu'au chainage)	Longeur=	2.5	m
	Somme Totale des largeurs des portes	Longeur=	2.7	m
2	Fenetres	Nombre=	4	
	Somme Totale des hauteurs de fenetres	Longeur=	5.3	m
	Somme Totale des largeurs des fenetres	Longeur=	3.8	m
E: Chainage Superieur				
1	20cm x 15cm Chainage Superieur (1:2:4)	Longeur=		m
2	25cm x 20cm Chainage Superieur (1:2:4)	Longeur=	30	m
3	30cm x 20cm Chainage Superieur (1:2:4)	Longeur=		m

PHASE 3: Toiture			**No.**	**Unit**
A: Toiture Lourde				
1	20cm Dalle en beton (1:2:4)	surface du plan =	25	m2
B: Toiture Legere				
	Longueur perpendiculaire a la pente	surface du plan =	0.0001	m
1	Toiture aux Faitieres et Lattes	surface du plan =		m2
2	Toiture aux Chevrons et Lattes	surface du plan =		m2
3	Toiture aux Chevrons	surface du plan =	0.001	m2

PHASE 4: Crepissage, Parquet, et Finition	**No.**	**Unit**
A: Crepissage		

1	10mm Crepissage (1:5)	surface des murs =	150.12	m2
2	15mm Crepissage (1:5)	surface des murs =		m2
3	20mm Crepissage (1:5)	surface des murs =		m2
B: Dalle de Plancher				
1	5cm Dalle (1:3:6)	surface des murs =		m2
2	10cm Dalle (1:3:6)	surface des murs =		m2
C: Peinture				
1	Peinture	surface des murs =	150.12	m2
D: Portes/Fenetres				
1	Fenetres	Nombre=	4	
2	Fer Forge	Nombre=	4	
3	Claustras	Nombre=		
4	Portes	Nombre=	3	

Devis Estimatif -- Nouvelle Construction en Maconnerie Enchainee

Addresse du Batîment: Maison 3(RDC) **Date:** 16-Feb-2012

Ingénieur: SELOIS Kervens

					TRANCHE 1 Preparation & Fondation			TRANCHE 2 Murs jusqu'a la Toiture			TRANCHE 3 Roof & Finish			TRANCHE 3 Holdback / Add'l Req			Total Pour Toutes les Tranches	
No	**Article**	**Prix Unitaire**	**Unité**		**# d'unités**	**Prix Total**		**# d'unités**	**Prix Total**		**# d'unités**	**Prix Total**		**# d'unités**	**Prix Total**		**# d'unités**	**Prix Total**
1	Ciment	$7.50	42.5kg sac		17.00	$127.50		24.00	$180.00		27	$202.50					**68**	**$510.00**
2	Sable de Rivière - lave	$25.00	m3		1.41	$35.20											**1**	**$35.20**
3	Sable de Rivière	$19.00	m3					2.00	$38.00								**2**	**$38.00**
4	Sable Blanc	$20.00	m3		1.71	$34.28		1.00	$20.00		3	$60.00					**6**	**$114.28**
5	Gravier concasse	$23.00	m3		1.00	$23.00		2.00	$46.00		2	$46.00					**5**	**$115.00**
6	Gravier roule	$13.00	m3		90.00	$1,170.00											**90**	**$1,170.00**
7	Roche riviere	$21.00	m3		1.00	$21.00											**1**	**$21.00**
8	Roche calcaire	$20.00	m3															
9	Blocs de béton (30x20x40)	$1.13	chaque															
10	Blocs de béton (20x20x40)	$0.80	chaque					707.00	$565.60								**707**	**$565.60**
11	Blocs de béton (15x20x40)	$0.65	chaque															
12	Blocs de béton (12x20x40)	$0.45	chaque								209	$94.05					**209**	**$94.05**
13	Blocs de béton (10x20x40)	$0.40	chaque															
14	Brique ciment (6x10x20)	$32.00	chaque															
15	Claustra	$0.80	chaque								36	$28.80					**36**	**$28.80**
16	Barres #7	$6.50	m															
17	Barres #6	$5.25	m															
18	Barres #5	$3.30	m															
19	Barres #4	$1.11	m		5.00	$5.55		146.00	$162.06								**151**	**$167.61**
20	Barres #3	$0.77	m		126.00	$97.02		273.00	$210.21		300	$231.00					**699**	**$538.23**
21	Barres #2	$0.33	m		120.00	$39.60		74.00	$24.42		30	$9.90					**224**	**$73.92**
22	Fil à ligaturer	$1.40	livre															
23	Bois 1x4	$0.60	m															
24	Bois 1x6	$0.70	m															
25	Bois 1x8 preparee	$0.90	m															
26	Bois 1x8 brute	$0.80	m															
27	Bois 1x12	$1.55	m															
28	Bois 2x2	$0.63	m															
29	Bois 2x4 preparee	$1.05	m															
30	Bois 2x4 brute	$0.85	m								21	$17.85					**21**	**$17.85**
31	Feuille de plywood (1/4")	$13.00	chaque															
32	Feuille de plywood (1/2")	$25.00	chaque															
33	Feuille de plywood (3/4")	$36.00	chaque															
34	Hardboard		chaque															
35	Préservatif pour bois	$20.00	gallon															
36	Straps	$1.65	m								17	$28.05					**17**	**$28.05**
37	Clous Variés	$1.20	livre								1	$1.20					**1**	**$1.20**
38	Clous de toiture	$1.40	livre								1	$1.40					**1**	**$1.40**
39	Tôles 3'x6'		chaque															
40	Tôles 3'x8'	$26.00	chaque															

41	Tôles 3'x10'	$28.00	chaque															
42	Tôles 3'x12'	$30.00	chaque								1	$30.00					**1**	**$30.00**
43	Tôles carrees 3'x12'		chaque															
44	Tôles ondulees, 28ga	$5.00	m3															
45	Tôles carrees, 28ga		m3															
46	Faîtière	$5.00	m															
47	Porte 36" x 80"	$88.00	chaque								3	$264.00					**3**	**$264.00**
48	Door frame 1x6 S4S	$16.00	chaque															
49	Fenetre	$260.00	chaque								4	$1,040.00					**4**	**$1,040.00**
50	Grillage	$45.00	chaque								4	$180.00					**4**	**$180.00**
51	Peinture	$10.00	gallon								6	$60.00					**6**	**$60.00**
52	Location de Coffrage (planc	$0.29	m															
53	Location de Coffrage(plywo	$1.68	m2															
54	Location d'Etais metallique	$2.50	chaque															
55	Main d'oeuvre	$0.40	% mat's															
56	Travail Boss	$15.00	jour															
57	Travail Ouvrier	$5.00	jour															
	Coût des matériaux					**$1,553**			**$1,246**			**$2,295**						**$5,094**
	Location de coffrage et d'e'tais																	
	Coût de la main d'œuvre					**$18**			**$591**			**$914**						**$1,522**
Sous-total						$1,570.75			$1,837.42			$3,208.35						**$6,616.52**
20% pour imprévus et coûts supplémentaires						$314.15			$367.48			$641.67						**$1,323.30**
Totals						**$1,885**			**$2,205**			**$3,850**				**Grand Total:**		**$7,940**
Demande de Versement:						**$1,885**			**$2,204.90**			**$3,850.02**						**$7,940**

REMARQUES: Tous les prix sont en dollars US

Devis Estimatif

Build Change Post-Earthquake Technical Assistance Program, Haiti

Last Updated: 12-Sep-11

Note: All data should be entered on this page and will automatically be populated on other sheets.

Proprietaire:	ARC	**Date:**	16-Feb-12
Addresse:	Maison 3(etage)	**Ingenieur:**	SELOIS Kervens
GPS:	so	**Surface de la maison (m^2):**	25
Telephone:	so		

PHASE 0: Preparation du Site			**No.**	**Unit**
A: Demolition				
Item	**Description**	**Column1**	**QTY**	**UNIT**
1	Enlevement d'une toiture legere	surface du plan =		m^2
2	Demolition d'une toiture lourde	surface du plan =		m^2
3	Demolition des murs et colonnes	surface des murs =		m^2
4	Demolition d'une dalle non armee	surface du plan =		m^2
5	Demolition de la fondation	longuer des murs =		m
B: Deblaiement du site				
1	Ramassage de la demolition	surface du plan =		m^2
2	Ramassage des ordures	surface du site =		m^2
3	Enlevement des arbres (preference a les laisser), arbustes, herbe, etc	surface en herbe =		m^2

PHASE 1: Foundation			**No.**	**Unit**
A: Foundation				
1	Semelle courante	Longeur=		m
2	Semelle pour colonne autoportante	Nombre=		
3	Murs de fondation en roche	Longeur=		m
4	Murs de fondation en beton cyclopeen	Longeur=		m
B: Chainage Inferieur				
1	20cm x 15cm Chainage Inferieur (1:2:4)	Longeur=		m
2	25cm x 20cm Chainage Inferieur(1:2:4)	Longeur=		m
3	30cm x 20cm Chainage Inferieur (1:2:4)	Longeur=		m

PHASE 2: Murs, Colonnes, Chainages			No.	Unit
A: Walls				
1	Murs bloc 15cm	surface des murs =	53.81	m2
2	Murs bloc 20cm	surface des murs =		m2
B: Colonnes en Beton				
0	Nombre de colonnes	Nombre=	10	
1	Colonnes 15cm x 15cm (1:2:4)	Longeur=	3	m
2	Colonnes 20cm x 20cm (1:2:4)	Longeur=		m
3	Colonnes 25cm x 25cm (1:2:4)	Longeur=		m
C: Chainage Intermediare				
1	15cm x 10cm Chainage intermediare (1:2:4)	Longeur=	25.6	m
2	20cm x 10cm Chainage intermediare (1:2:4)	Longeur=		m
D: Ouvertures				
1	Portes	Nombre=	4	
	Hauteur (jusqu'au chainage)	Longeur=	2.5	m
	Somme Totale des largeurs des portes	Longeur=	3.7	m
2	Fenetres	Nombre=	3	
	Somme Totale des hauteurs de fenetres	Longeur=	3.9	m
	Somme Totale des largeurs des fenetres	Longeur=	2.8	m
E: Chainage Superieur				
1	20cm x 15cm Chainage Superieur (1:2:4)	Longeur=		m
2	25cm x 20cm Chainage Superieur (1:2:4)	Longeur=	30	m
3	30cm x 20cm Chainage Superieur (1:2:4)	Longeur=		m

PHASE 3: Toiture			No.	Unit
A: Toiture Lourde				
1	20cm Dalle en beton (1:2:4)	surface du plan =		m2
B: Toiture Legere				
	Longueur perpendiculaire a la pente	surface du plan =	5	m
1	Toiture aux Faitieres et Lattes	surface du plan =		m2
2	Toiture aux Chevrons et Lattes	surface du plan =		m2
3	Toiture aux Chevrons	surface du plan =	25	m2

PHASE 4: Crepissage, Parquet, et Finition			No.	Unit
A: Crepissage				
1	10mm Crepissage (1:5)	surface des murs =	107.62	m2
2	15mm Crepissage (1:5)	surface des murs =		m2
3	20mm Crepissage (1:5)	surface des murs =		m2
B: Dalle de Plancher				
1	5cm Dalle (1:3:6)	surface des murs =		m2
2	10cm Dalle (1:3:6)	surface des murs =		m2
C: Peinture				
1	Peinture	surface des murs =	107.62	m2
D: Portes/Fenetres				
1	Fenetres	Nombre=	3	
2	Fer Forge	Nombre=	3	
3	Claustras	Nombre=		
4	Portes	Nombre=	4	

Devis Estimatif -- Nouvelle Construction en Maconnerie Enchainee

Addresse du Batîment: Maison 3(etage) **Date:** 16-Feb-2012

Ingénieur: SELOIS Kervens

					TRANCHE 1 Preparation & Fondation			TRANCHE 2 Murs jusqu'a la Toiture			TRANCHE 3 Roof & Finish			TRANCHE 3 Holdback / Add'l Req			Total Pour Toutes les Tranches	
No	**Article**	**Prix Unitaire**	**Unité**		**# d'unités**	**Prix Total**		**# d'unités**	**Prix Total**		**# d'unités**	**Prix Total**		**# d'unités**	**Prix Total**		**# d'unités**	**Prix Total**
1	Ciment	$7.50	42.5kg sac		3.00	$22.50		27.00	$202.50		8	$60.00					**38**	**$285.00**
2	Sable de Rivière - lave	$25.00	m3		1.00	$25.00											**1**	**$25.00**
3	Sable de Rivière	$19.00	m3					1.00	$19.00								**1**	**$19.00**
4	Sable Blanc	$20.00	m3					2.00	$40.00		2	$40.00					**4**	**$80.00**
5	Gravier concasse	$23.00	m3		1.00	$23.00		3.00	$69.00								**4**	**$92.00**
6	Gravier roule	$13.00	m3															
7	Roche riviere	$21.00	m3		1.00	$21.00											**1**	**$21.00**
8	Roche calcaire	$20.00	m3															
9	Blocs de béton (30x20x40)	$1.13	chaque															
10	Blocs de béton (20x20x40)	$0.80	chaque															
11	Blocs de béton (15x20x40)	$0.65	chaque					604.00	$392.60								**604**	**$392.60**
12	Blocs de béton (12x20x40)	$0.45	chaque															
13	Blocs de béton (10x20x40)	$0.40	chaque															
14	Brique ciment (6x10x20)	$32.00	chaque															
15	Claustra	$0.80	chaque								36	$28.80					**36**	**$28.80**
16	Barres #7	$6.50	m															
17	Barres #6	$5.25	m															
18	Barres #5	$3.30	m															
19	Barres #4	$1.11	m		5.00	$5.55		267.00	$296.37								**272**	**$301.92**
20	Barres #3	$0.77	m					272.00	$209.44								**272**	**$209.44**
21	Barres #2	$0.33	m					173.00	$57.09								**173**	**$57.09**
22	Fil à ligaturer	$1.40	livre															
23	Bois 1x4	$0.60	m															
24	Bois 1x6	$0.70	m															
25	Bois 1x8 preparee	$0.90	m															
26	Bois 1x8 brute	$0.80	m															
27	Bois 1x12	$1.55	m															
28	Bois 2x2	$0.63	m															
29	Bois 2x4 preparee	$1.05	m															
30	Bois 2x4 brute	$0.85	m								62	$52.70					**62**	**$52.70**
31	Feuille de plywood (1/4")	$13.00	chaque															
32	Feuille de plywood (1/2")	$25.00	chaque															
33	Feuille de plywood (3/4")	$36.00	chaque															
34	Hardboard		chaque															
35	Préservatif pour bois	$20.00	gallon															
36	Straps	$1.65	m								9	$14.85					**9**	**$14.85**
37	Clous Variés	$1.20	livre								8	$9.60					**8**	**$9.60**
38	Clous de toiture	$1.40	livre								3	$4.20					**3**	**$4.20**
39	Tôles 3'x6'		chaque															
40	Tôles 3'x8'	$26.00	chaque															

41	Tôles 3'x10'	$28.00	chaque															
42	Tôles 3'x12'	$30.00	chaque								10	$300.00					**10**	**$300.00**
43	Tôles carrees 3'x12'		chaque															
44	Tôles ondulees, 28ga	$5.00	m3															
45	Tôles carrees, 28ga		m3															
46	Faîtière	$5.00	m															
47	Porte 36" x 80"	$88.00	chaque								4	$352.00					**4**	**$352.00**
48	Door frame 1x6 S4S	$16.00	chaque															
49	Fenetre	$260.00	chaque								3	$780.00					**3**	**$780.00**
50	Grillage	$45.00	chaque								3	$135.00					**3**	**$135.00**
51	Peinture	$10.00	gallon								4	$40.00					**4**	**$40.00**
52	Location de Coffrage (planc	$0.29	m															
53	Location de Coffrage(plywo	$1.68	m2															
54	Location d'Etais metallique	$2.50	chaque															
55	Main d'oeuvre	$0.40	% mat's															
56	Travail Boss	$15.00	jour															
57	Travail Ouvrier	$5.00	jour															
	Coût des matériaux					**$97**			**$1,286**			**$1,817**						**$3,200**
	Location de coffrage et d'e'tais																	
	Coût de la main d'œuvre					**$18**			**$509**			**$731**						**$1,258**
Sous-total						$114.65			$1,794.70			$2,548.50						**$4,457.84**
20% pour imprévus et coûts supplémentaires						$22.93			$358.94			$509.70						**$891.57**
Totals						**$138**			**$2,154**			**$3,058**				**Grand Total:**		**$5,349**
Demande de Versement:						**$138**			**$2,153.63**			**$3,058.20**						**$5,349**

REMARQUES: Tous les prix sont en dollars US

Devis Estimatif pour le bloc sanitaire					
Item	Prix unitaire	unite	Quantite	Prix total	
	$ US			$ US	
Evier	67.5		1	67.5	
WC	162		1	162	
Tuyau 2''	4.6		10	46	
tuyau 4''	9.8		2	19.6	
Convertisseur (2'' en 4'')	6		3	18	
Coude 2''	2		8	16	
Coude 4''	3		4	12	
TOTAL				341.1	
FINAL				$ 341.1 US	
Fosse septique				700	
Grand total				1041.1	$ US

N:b C'est un devis prix forfaitairement pour une maison a un seul niveau
pour les maisons a deux niveau on va multiplier par 2 le montant final.

Donc Rez de chausse + etage $ 1382.2

Homeowner:_____		ID No:_____		GPS: _____	House Type: _____			**SITE and SOIL CONDITIONS**		
BC Engineer:_____		Address: _____								
Homeowner Phone No:_____		Boss: _____			Boss Phone No: _____					
BUILD THE HOUSE ON A SAFE SITE										
1	**DO NOT BUILD ON STEEP SLOPE**	**Slope?**	**Date**	**Photo #**	**Recommendation Made**	**Done?**	**Date**	**Photo #**	**Recommendation Implemented**	**SOURCE**
a	Less than 10% = OK	< 10%				Yes/No				MTPTC 8
b	Between 10% and 35% - Consult engineer	10 < 35%				Yes/No				MTPTC 8
c	More than 35% = Do not build	> 35%				Yes/No				MTPTC 8
2	**SETBACKS from STEEP SLOPES**	**Planned?**	**Date**	**Photo #**	**Recommendation Made**	**Done?**	**Date**	**Photo #**	**Recommendation Implemented**	
a	At least 10m behind house to slope	Yes/No				Yes/No				MTPTC 9
b	At least 10m in front of house to slope	Yes/No				Yes/No				MTPTC 9
c	No loose debris, falling soil or rock within 10m of house	Yes/No				Yes/No				MTPTC 9
d	No existing building within 10m of house upslope of site	Yes/No				Yes/No				Build Change
3	**IDENTIFY SEISMIC HAZARD**	**S_{DS}**	**Date**	**Photo #**	**Recommendation Made**	**Done?**	**Date**	**Photo #**	**Recommendation Implemented**	
a	Site is located in an area of medium or high seismicity (Yellow or Orange Zone)	1.05g				Yes/No				Build Change
b	Site is located in an area of very high seismicity (Red Zone)	1.67g				Yes/No				Build Change
4	**SETBACKS from RIVER and DRAINAGE**	**Planned?**	**Date**	**Photo #**	**Recommendation Made**	**Done?**	**Date**	**Photo #**	**Recommendation Implemented**	
a	At least 10 m from riverbed or drainage channel	Yes/No				Yes/No				MTPTC 13
b	If flood zone, finished floor surface 80cm above ground	Yes/No				Yes/No				MTPTC Design Criteria
c	If non flood zone, finished floor surface 30cm above ground	Yes/No				Yes/No				MTPTC Design Criteria
5	**IDENTIFY SOIL TYPE & SCREEN FOR HAZARDOUS SOILS**	**Soil?**	**Date**	**Photo #**	**Recommendation Made**	**Done?**	**Date**	**Photo #**	**Recommendation Implemented**	
a	Soil is Type A (Rock)	Yes/No				Yes/No				Build Change
b	Soil is Type B (Compact Gravels and Compact Sands)	Yes/No				Yes/No				Build Change
c	Soil is Type C (Non-consolidated Sand, Silt, Soft Clay) and...	Yes/No				Yes/No				Build Change
d	If Type C Soil, there exists no risk of liquefaction (asses water table location)	Yes/No								Build Change
e	Soil is not expansive clay (use linear shrinkage test)	Yes/No				Yes/No				Build Change
6	**SCREENING FOR OBSTACLES ON SITE**	**Planned?**	**Date**	**Photo #**	**Recommendation Made**	**Done?**	**Date**	**Photo #**	**Recommendation Implemented**	
a	There are no large obstacles that need to be removed (trees, existing walls etc)	Yes/No				Yes/No				Build Change
b	The site is not covered in fill material	Yes/No				Yes/No				Build Change
c	If no, the fill is less than 30cm deep	Yes/No				Yes/No				Build Change
7	**SETBACKS FROM ROADS and BUILDINGS**	**Planned?**	**Date**	**Photo #**	**Recommendation Made**	**Done?**	**Date**	**Photo #**	**Recommendation Implemented**	
a	Setback at least 2m from road or front boundary	Yes/No				Yes/No				Build Change
b	Setback at least 1m from side boundary	Yes/No				Yes/No				Build Change
c	Rainwater can flow into drainage	Yes/No				Yes/No				Build Change
d	Building constructed at least 4m behind the fence	Yes/No				Yes/No				Build Change
e	Septic tank more than 10m from active well	Yes/No				Yes/No				Build Change
f	Minimum distance between two buildings = 1.5m	Yes/No				Yes/No				MTPTC 23
Homeowner Signature:_____					Date: _____	Overall Assessment: Meets Minimum Standard?				
						Oui / No				
BC Engineer Signature: _____					Date: _____	Comments:				
BC Team Leader Signature: _____					Date: _____					
BC Manager Signature: _____					Date: _____					

Homeowner:_____		ID No:_____			GPS: _____	House Type: _____			**CONFIGURATION**	
BC Engineer:_____		Address: _____							**CHECKLIST**	
Homeowner Phone No:_____		Boss: _____				Boss Phone No: _____				
									build change	
CONFIGURATION RULES FOR SINGLE and TWO STORY HOMES										
1	**PLAN**	**Planned?**	**Date**	**Photo #**	**Recommendation Made**	**Done?**	**Date**	**Photo #**	**Recommendation Implemented**	
a	For single storey buildings with lightweight roof, length to width ratio equal to 3 or less	Yes/No				Yes/No				GNA
b	For other types of building, length to width ratio equal to 2.5 or less	Yes/No				Yes/No				GNA
c	Height to width ratio equal to 1.7 or less	Yes/No				Yes/No				GNA
b	Separate irregular shaped buildings(L,U,E)	Yes/No				Yes/No				MTPTC 22
2	**ELEVATION**	**Planned?**	**Date**	**Photo #**	**Recommendation Made**	**Done?**	**Date**	**Photo #**	**Recommendation Implemented**	
a	Building has not more than 2 storeys	Yes/No				Yes/No				Build Change
b	Maximum height of ground floor walls = 2.7m	Yes/No				Yes/No				GNA
c	Maximum height of second floor walls = 2.5m	Yes/No				Yes/No				GNA
3	**TYPE of FOUNDATION**	**Planned?**	**Date**	**Photo #**	**Recommendation Made**	**Done?**	**Date**	**Photo #**	**Recommendation Implemented**	
a	Do not use short columns (use continuous strip foundation)	Yes/No				Yes/No				Build Change
4	**MINIMUM SHEAR WALL DENSITY**	**Complies?**	**Date**	**Photo #**	**Recommendation Made**	**Done?**	**Date**	**Photo #**	**Recommendation Implemented**	
a	Only include properly confined walls longer than 1m in shear wall density calculation	Yes/No				Yes/No				Build Change
b	Shear wall density complies with Build Change guidelines	Yes/No				Yes/No				Build Change
5	**SHEAR WALL LOCATION**	**Planned?**	**Date**	**Photo #**	**Recommendation Made**	**Done?**	**Date**	**Photo #**	**Recommendation Implemented**	
a	At least two lines of shear walls in X direction	Yes/No				Yes/No				MTPTC 41
b	At least two lines of shear wallls in Y direction	Yes/No				Yes/No				MTPTC 41
c	Shear walls are symmetrically placed	Yes/No				Yes/No				MTPTC 41
d	Shear walls are as far as possible from one another	Yes/No				Yes/No				MTPTC 41
e	Shear walls are on exterior of building	Yes/No				Yes/No				MTPTC 41
f	Spacing or perpendicular or cross walls does not exceed Build Change guidelines	Yes/No				Yes/No				Build Change
6	**TIE COLUMN LOCATION**	**Planned?**	**Date**	**Photo #**	**Recommendation Made**	**Done?**	**Date**	**Photo #**	**Recommendation Implemented**	
a	Every corner (L)	Yes/No				Yes/No				MTPTC 41
b	Every wall intersection (T)	Yes/No				Yes/No				MTPTC 41
c	Every change in the direction of the wall	Yes/No				Yes/No				Build Change
d	At both ends of every wall longer than 30cm	Yes/No				Yes/No				Build Change
7	**BOND BEAM LOCATION**	**Planned?**	**Date**	**Photo #**	**Recommendation Made**	**Done?**	**Date**	**Photo #**	**Recommendation Implemented**	
a	At the foundation (plinth beam)	Yes/No				Yes/No				MTPTC 39
b	At the roof level (ring beam)	Yes/No				Yes/No				MTPTC 39
c	Intermediate ring beam at sill level	Yes/No				Yes/No				MTPTC 79
8	**OPENING SIZE**	**Planned?**	**Date**	**Photo #**	**Recommendation Made**	**Done?**	**Date**	**Photo #**	**Recommendation Implemented**	
a	Maximum 1/2 length between to crosswalls	Yes/No				Yes/No				MTPTC 43
b	Openings positioned directly under ring beam	Yes/No				Yes/No				Build Change
c	Doors reinforced on both sides with 8cm column	Yes/No				Yes/No				MTPTC 81
d	Windows reinforced on both sides with 8cm column	Yes/No				Yes/No				MTPTC 81
9	**ACCESS and VENTILATION**	**Planned?**	**Date**	**Photo #**	**Recommendation Made**	**Done?**	**Date**	**Photo #**	**Recommendation Implemented**	
a	At least two entrances/exits	Yes/No				Yes/No				Build Change
b	Entrances on different sides of building	Yes/No				Yes/No				Build Change
c	Opening/ventilation greater than 5% of floor area	Yes/No				Yes/No				Build Change
d	Opening position based on wind direction	Yes/No				Yes/No				Build Change
e	Gable not facing the wind	Yes/No								Build Change
10	**TWO STORY CONFIGURATION RULES**	**Planned?**	**Date**	**Photo #**	**Recommendation Made**	**Done?**	**Date**	**Photo #**	**Recommendation Implemented**	
a	Do not build buildings with open ground floor	Yes/No				Oui / No				MTPTC 15
b	Do not build buildings with overhang	Yes/No				Oui / No				MTPTC 25
c	Columns are continuous both floors	Yes/No				Oui / No				MTPTC 25
d	Shear walls line up vertically	Yes/No				Oui / No				MTPTC 25, 42
e	Openings line up vertically	Yes/No				Oui / No				MTPTC 25, 42
f	Do not construct a second floor over a porch, or follow...	Yes/No				Oui / No				MTPTC 17
g	Specific connection detailing	Yes/No				Oui / No				Build Change
Homeowner Signature:_____					Date: _____	Overall Assessment: Meets Minimum Standard?				
						Oui / No				
BC Engineer Signature: _____					Date: _____	Comments:				
BC Team Leader Signature: _____					Date: _____					
BC Manager Signature: _____					Date: _____					

Homeowner:_____ ID No:_____ GPS: _____ House Type: _____

BC Engineer:_____ Address: _____

Homeowner Phone No:_____ Boss: _____

MATERIALS QUALITY CHECKLIST

USE GOOD QUALITY MATERIALS!

1	WATER, SAND and AGGREGATES	Planned?	Date	Photo #	Recommendation Made	Done?	Date	Photo #	Recommendation Implemented	
a	Use clean water (not salty)	Yes/No								
b	Use clean river sand	Yes/No				Yes/No				
c	Use crushed/angular gravel for concrete	Yes/No				Yes/No				
d	Maximum gravel size 2cm for concrete	Yes/No				Yes/No				MTPTC 48
2	**CEMENT**	**Planned?**	**Date**	**Photo #**	**Recommendation Made**	**Done?**	**Date**	**Photo #**	**Recommendation Implemented**	
a	Use Type 1 for columns, beams and blocks	Yes/No				Yes/No				
b	Store off the ground and out of rain	Yes/No				Yes/No				
3	**STEEL**	**Planned?**	**Date**	**Photo #**	**Recommendation Made**	**Done?**	**Date**	**Photo #**	**Recommendation Implemented**	
a	Verify Grade 60 marking (minimum) on bars or…	Yes/No				Yes/No				MTPTC 60
b	Grade 40 for single story buildings with leightweight roofs	Yes/No				Yes/No				
c	Use ribbed bars	Yes/No				Yes/No				
d	Do not use rusty or recycled bars for longitudinal bars	Yes/No				Yes/No				
e	Use at least #3 bars for plinth beam and ring beam	Yes/No				Yes/No				
f	Use at least #4 bars for tie columns and door/window columns	Yes/No				Yes/No				
g	Use at least #2 bars for stirrups	Yes/No				Yes/No				
h	Cut column steel long enough for overlap ≥ ø 50	Yes/No				Yes/No				MTPTC 65
i	Store off the ground and out of rain	Yes/No				Yes/No				
4	**CONCRETE BLOCKS**	**Planned?**	**Date**	**Photo #**	**Recommendation Made**	**Done?**	**Date**	**Photo #**	**Recommendation Implemented**	
a	Compressive strength of blocks meets design requirements	Yes/No				Yes/No				Build Change
b	Block width equal to, or greater than 15cm	Yes/No				Yes/No				Build Change
c	Use block 15 for concrete slab	Yes/No				Yes/No				MTPTC 90
d	Blocks have been cured for at least seven days	Yes/No				Yes/No				Build Change
e	No cracks or chips or partial blocks unless intact 1/3 of 2/3	Yes/No				Yes/No				Build Change
f	Dimensionsdon not vary by more than 5mm	Yes/No				Yes/No				Build Change
g	Longitudinal block wall thickness minimum 3.0 cm	Yes/No				Yes/No				MTPTC 37
h	Transverse block wall thickness minimum 2.5 cm	Yes/No				Yes/No				MTPTC 37
	TIMBER and CGI SHEET	**Planned?**	**Date**	**Photo #**	**Recommendation Made**	**Done?**	**Date**	**Photo #**	**Recommendation Implemented**	
a	Use dimensional lumber	Yes/No				Yes/No				
b	Use Visually Graded Southern Pine #2 or equivalent	Yes/No				Yes/No				
c	Timber used free of knots and splits	Yes/No				Yes/No				
d	Do not use green lumber or lumber with high moisture content	Yes/No				Yes/No				
e	Do not use CCA pressure treated lumber (has green tint)	Yes/No				Yes/No				

Homeowner Signature:_____ Date: _____

BC Engineer Signature: _____ Date: _____

BC Team Leader Signature: _____ Date: _____

BC Manager Signature: _____ Date: _____

Overall Assessment: Meets Minimum Standard?

Oui / No

Comments:

		ID No:_____			GPS: _____	House Type: _____			**FOUNDATION**	
		Address: _____							**CHECKLIST**	
Homeowner Phone No:_____		Boss: _____								
NG FOUNDATION										
1	**SITE LINE OUT and BATTERBOARD**	**Planned?**	**Date**	**Photo #**	**Recommendation Made**	**Done?**	**Date**	**Photo #**	**Recommendation Implemented**	
a	Excavation consistent with plan	Yes/No				Yes/No				
b	Batterboard completed	Yes/No				Yes/No				MTPTC 54
c	Excavation lines at right angles	Yes/No				Yes/No				
2	**FOUNDATION EXCAVATION DEPTH**	**Planned?**	**Date**	**Photo #**	**Recommendation Made**	**Done?**	**Date**	**Photo #**	**Recommendation Implemented**	
a	Depth of foundation excavation (minimum 80 cm)	Yes/No				Yes/No				MTPTC 56
b	Depth of excavation in natural ground (min 50 cm)	Yes/No				Yes/No				MTPTC 56 says min 50 cm in natural ground
3	**FOUNDATION MINIMUM WIDTH**	**Planned?**	**Date**	**Photo #**	**Recommendation Made**	**Done?**	**Date**	**Photo #**	**Recommendation Implemented**	
	Check soil strength with 12mm rod. If penetration > 6cm, report to BC	Yes/No				Yes/No				
a	HARD (Rock, Gravel) = 40 cm	Yes/No				Yes/No				MTPTC 56
b	MEDIUM (Compacted sand, hard clay) = 50 cm	Yes/No				Yes/No				MTPTC 56
c	SOFT (Loose sand, soft clay) = 70 cm	Yes/No				Yes/No				MTPTC 56
4	**FOUNDATION EXCAVATION**	**Planned?**	**Date**	**Photo #**	**Recommendation Made**	**Done?**	**Date**	**Photo #**	**Recommendation Implemented**	
a	Remove water from excavation	Yes/No				Yes/No				
b	Remove loose soil from excavation	Yes/No				Yes/No				MTPTC 59
c	Remove any organic debris or tree trunks	Yes/No				Yes/No				MTPTC 59
d	Bottom flat and level	Yes/No				Yes/No				MTPTC 59
e	Last 5cm of soil excavated immediately prior to pouring blinding	Yes/No				Yes/No				Build Change
5	**BLINDING BASE LAYER**	**Planned?**	**Date**	**Photo #**	**Recommendation Made**	**Done?**	**Date**	**Photo #**	**Recommendation Implemented**	
a	Use 5 cm blinding base layer	Yes/No				Yes/No				MTPTC 56, 59
b	Mix 1:4:5	Yes/No				Yes/No				MTPTC 48
c	Use coarse river sand	Yes/No				Yes/No				MTPTC 48
d	Use gravel max 3 cm	Yes/No				Yes/No				MTPTC 48
e	Blinding is well compacted	Yes/No				Yes/No				
6-1	**OPTION 1: Large Aggregate Concrete Strip**	**Planned?**	**Date**	**Photo #**	**Recommendation Made**	**Done?**	**Date**	**Photo #**	**Recommendation Implemented**	
a	Mix 1:5:5 with 30% stone by volume	Yes/No				Yes/No				MTPTC 48 - cyclopean
b	Use coarse river sand	Yes/No				Yes/No				MTPTC 48 - cyclopean
c	Use gravel max 3 cm	Yes/No				Yes/No				MTPTC 48
d	Use stone max 25 cm	Yes/No				Yes/No				MTPTC 48
e	Wet stones and excavation before pouring concrete	Yes/No				Yes/No				MTPTC 64
f	Maximum depth of concrete poured in one go, less than 90 cm	Yes/No				Yes/No				MTPTC 64
g	Place stones progressively, more than 30 cm from columns	Yes/No				Yes/No				MTPTC 64
h	Scarify top for good contact	Yes/No				Yes/No				Build Change
i	Cure properly	Yes/No				Yes/No				
j	Wait 7 days for footing to harden before pouring plinth beam	Yes/No				Yes/No				
6-2	**OPTION 2: Stone Masonry Strip Footing**	**Planned?**	**Date**	**Photo #**	**Recommendation Made**	**Done?**	**Date**	**Photo #**	**Recommendation Implemented**	
a	Use cut, angular stones	Yes/No				Yes/No				Build Change
b	Use mix 1:5 for mortar	Yes/No				Yes/No				
c	Fill all gaps between stones with mortar	Yes/No				Yes/No				
d	Use cross stones every 1 m	Yes/No				Yes/No				
e	Scarify top for good contact	Yes/No				Yes/No				
f	Cure properly	Yes/No				Yes/No				
g	Backfill with compacted soil in 10 cm lifts	Yes/No				Yes/No				
6-3	**OPTION 3: BLOK 20 Strip Footing (2 story)**	**Planned?**	**Date**	**Photo #**	**Recommendation Made**	**Done?**	**Date**	**Photo #**	**Recommendation Implemented**	
a	Mortar mix 1:3	Yes/No				Yes/No				GNA
b	Concrete blocks are 200mm wide ("Bloc 20")	Yes/No				Yes/No				
c	Mortar joints are 12.5mm	Yes/No				Yes/No				
d	Stagger vertical joints by 1/3 block	Yes/No				Yes/No				
e	Leave space for tie columns and tooth wall on each side by 1/3 block	Yes/No				Yes/No				
f	Wet concrete block prior to use	Yes/No				Yes/No				
i	Cure properly	Yes/No				Yes/No				
h	Backfill with compacted soil in 10 cm lifts	Yes/No				Yes/No				
7	**TIE COLUMN ANCHORS**	**Planned?**	**Date**	**Photo #**	**Recommendation Made**	**Done?**	**Date**	**Photo #**	**Recommendation Implemented**	
a	Use four #4 bars at each tie column location with #2 stirrup cage	Yes/No				Yes/No				MTPTC 57
b	Bend bottom of #4 bars in four directions to create self supporting rebar cage	Yes/No				Yes/No				
c	Minimum 25 cm length foot	Yes/No				Yes/No				MTPTC 61
d	Use 3cm concrete spacers to achieve proper concrete cover below bars	Yes/No				Yes/No				
8	**PIPING**	**Planned?**	**Date**	**Photo #**	**Recommendation Made**	**Done?**	**Date**	**Photo #**	**Recommendation Implemented**	MTPTC 63
a	Do not put piping through reinforced concrete	Yes/No				Yes/No				MTPTC 63
b	Put piping through strip footing	Yes/No				Yes/No				
					Date: _____	Overall Assessment: Meets Minimum Standard?				
						Oui / No				
					Date: _____	Comments:				
					Date: _____					
					Date: _____					

Homeowner:_____		ID No:_____		GPS: _____		House Type: _____			**REINFORCED CONCRETE**	
BC Engineer:_____		Address: _____							**CHECKLIST**	
Homeowner Phone No:_____		Boss: _____				Boss Phone No: _____			build change	
GOOD QUALITY REINFORCED CONCRETE TIE COLUMNS and BOND BEAMS										
1	**PLINTH BEAM and RING BEAM**	**Planned?**	**Date**	**Photo #**	**Recommendation Made**	**Done?**	**Date**	**Photo #**	**Recommendation Implemented**	
a	20 cm wide, 15cm high	Yes/ No				Yes/ No				
b	**Longitudinal Bars**									
1	Four #3 (3/8") longitudinal bars	Yes/ No				Yes/ No				MTPTC 65
2	Minimum Strength = Grade 60 or…	Yes/ No								
3	Grade 40 for single story buildings with lightweight roofs	Yes/ No								
5	Type of longitudinal bars RIBBED	Yes/ No				Yes/ No				
c	***Stirrups***									
1	#2 closed stirrups	Yes/ No				Yes/ No				
2	Stirrup hooks bent at 135 degrees	Yes/ No				Yes/ No				
3	Hook length for stirrup minimum 4 cm	Yes/ No				Yes/ No				
4	Cover over steel minimum 2.5 cm	Yes/ No				Yes/ No				
2	**TIE COLUMN**	**Planned?**	**Date**	**Photo #**	**Recommendation Made**	**Done?**	**Date**	**Photo #**	**Recommendation Implemented**	
a	***Longitudinal Bars***					Yes/ No				
1	Minimum section 150mm by 150mm	Yes/ No				Yes/ No				Conflicts with MTPTC 60
2	Tie columns used at locations per configuration	Yes/ No				Yes/ No				
3	Four #4 longitudinal bars	Yes/ No				Yes/ No				
4	Type of longitudinal bars RIBBED	Yes/ No				Yes/ No				
b	***Column Ties***									
1	#2 closed ties	Yes/ No				Yes/ No				
2	Stirrup hooks bent at 135 degrees	Yes/ No				Yes/ No				
3	Hook length for stirrup minimum 4 cm	Yes/ No				Yes/ No				
4	Cover over steel minimum 2.5 cm	Yes/ No				Yes/ No				
3	**BAR ASSEMBLY**	**Planned?**	**Date**	**Photo #**	**Recommendation Made**	**Done?**	**Date**	**Photo #**	**Recommendation Implemented**	
a	***BEAM STIRRUPS and COLUMN TIES***									
1	Stirrup spacing maximum 20cm	Yes/ No				Yes/ No				MTPTC 60
2	Stirrups closely spaced (10cm) near all beam-column joints	Yes/ No				Yes/ No				MTPTC 60
3	Stirrup hooks rotated	Yes/ No				Yes/ No				MTPTC 60
4	Stirrups tied to longitundinal bars with binding wire	Yes/ No				Yes/ No				
b	***JOINT DETAILING***	Yes/ No								
1	Minimum lap length = 50Ø (50cm for #3 bars, 60cm for #4 bars)	Yes/ No				Yes/ No				MTPTC 66 says 60 cm
2	Apply one of overlap detailing options	Yes/ No				Yes/ No				MTPTC 67
3	Use extra L or T bars only if bars not cut properly	Yes/ No				Yes/ No				
4	All bent bars at corners and T-junctions bent at 90 degrees	Yes/ No				Yes/ No				
5	Laps tied with binding wire	Yes/ No				Yes/ No				
4	**FORMWORK and CONCRETE SPACER**	**Planned?**	**Date**	**Photo #**	**Recommendation Made**	**Done?**	**Date**	**Photo #**	**Recommendation Implemented**	
a	Formwork is good quality (not warped)	Yes/ No				Yes/ No				
b	Use wood spacer to maintain distance between forms	Yes/ No				Yes/ No				
c	Space between steel and formwork minimum 3 cm	Yes/ No				Yes/ No				
d	Use concrete spacers every 3-4 stirrups or as req to maintain cover	Yes/ No				Yes/ No				
e	Maximum size for concrete spacer is 3 cm x 3 cm x 3 cm	Yes/ No				Yes/ No				
f	Use binding wire in concrete spacer	Yes/ No				Yes/ No				
g	Check formwork for beams is level	Yes/ No				Yes/ No				
h	Check formwork for columns is plumb	Yes/ No				Yes/ No				
5	**CONCRETE MIXING**	**Planned?**	**Date**	**Photo #**	**Recommendation Made**	**Done?**	**Date**	**Photo #**	**Recommendation Implemented**	
a	Use Mix 1:2:4	Yes/ No				Yes/ No				
b	Use crushed, angular gravel	Yes/ No				Yes/ No				
c	Use gravel with size less than 2 cm	Yes/ No				Yes/ No				
d	Use clean, washed river sand	Yes/ No				Yes/ No				
e	Use clean water (not salty or muddy)	Yes/ No				Yes/ No				
f	Use Type 1 Cement	Yes/ No				Yes/ No				
g	Mix a clean, concrete or asphalt surface, not on dirt	Yes/ No				Yes/ No				
h	Using a mechanical mixer is best	Yes/ No				Yes/ No				MTPTC 64
i	Batch out gravel, then sand, then cement	Yes/ No				Yes/ No				
j	Turn over 3 times or until color is uniform	Yes/ No				Yes/ No				
k	Do not use too much water! Add water slowly	Yes/ No				Yes/ No				
l	Use slump test or hand test for water content	Yes/ No				Yes/ No				

6	CONCRETE POURING and CURING	Planned?	Date	Photo #	Recommendation Made	Done?	Date	Photo #	Recommendation Implemented	
a	Wet formwork and steel before pouring concrete	Yes/ No				Yes/ No				
b	Use concrete within 90 minutes of mixing with water if from factory	Yes/ No				Yes/ No				
c	if manually use in less than 30 minutes	Yes/ No				Yes/ No				
d	Ensure toothed areas of columns completely filled with concrete	Yes/ No				Yes/ No				
e	Use rod to consolidate concrete around reinforcement	Yes/ No				Yes/ No				
f	Complete entire beam within one day	Yes/ No				Yes/ No				
g	If concrete pouring must stop, use a diagonal joint with stones	Yes/ No				Yes/ No				MTPTC 68
h	Have plastic on standby, cover if it rains	Yes/ No				Oui / No				
i	Scarify top for good contact	Yes/ No				Oui / No				MTPTC 68
j	Cure for minimum 3 days by sprinkling clean water,	Yes/ No				Oui / No				
k	cure 5 times perday : MORNING, At, 8 , 10	Yes/ No				Oui / No				
l	AFTERNOON: 12, 14, 16, pour water slowly	Yes/ No				Oui / No				
7	CONCRETE INSPECTION	Planned?	Date	Photo #	Recommendation Made	Done?	Date	Photo #	Recommendation Implemented	
a	For slabs, remove formwork after 14 full days	Yes/ No				Oui / No				
b	If steel showing, demolish and rebuild	Yes/ No				Oui / No				
c	Remove the border of slab and/or beams after 48 hours	Yes/ No				Oui / No				
d	Any cracks larger than 3 mm	Yes/ No				Oui / No				
e	Many cracks in one location	Yes/ No				Oui / No				
f	Diagonal or vertical cracks anywhere in the beam	Yes/ No				Oui / No				
g	*If any of the above exist, demolish concrete and repour*	Yes/ No				Oui / No				
8	EMBEDDED STRAPS for RING BEAM - TRUSS CONNECTION	Planned?	Date	Photo #	Recommendation Made	Done?	Date	Photo #	Recommendation Implemented	
a	Straps are placed according to the plan	Yes/ No				Oui / No				
b	Length of straps above ring beam adequate	Yes/ No				Oui / No				
c	Straps are hooked below bottom of stirrups	Yes/ No				Oui / No				
d	Straps are tied to ring beam reinforcement with binding wire	Yes/ No				Oui / No				
Homeowner Signature:_____					Date: _____	Overall Assessment: Meets Minimum Standard?				
						Oui / No				
BC Engineer Signature: _____					Date: _____	Comments:				
BC Team Leader Signature: _____					Date: _____					
BC Manager Signature: _____					Date: _____					

Homeowner:_____			ID No:_____		GPS: _____		House Type: _____			**STRONG WALL**	
BC Engineer:_____			Address: _____							**CHECKLIST**	
Homeowner Phone No:_____			Boss: _____				Boss Phone No: _____			build change	
BUILD A STRONG MASONRY WALL											
1	**MORTAR MIXING**	**Planned?**	**Date**	**Photo #**	**Recommendation Made**	**Done?**	**Date**	**Photo #**	**Recommendation Implemented**		
a	Use mortar 1:3 mix	Yes / No				Yes / No					
b	Use clean, fine river sand	Yes / No				Yes / No					
c	Use clean water (not salty or muddy)	Yes / No				Yes / No					
d	Use Type 1 Cement	Yes / No				Yes / No					
e	Mix a clean, concrete or asphalt surface, not on dirt	Yes / No				Yes / No					
f	Using a mechanical mixer is best	Yes / No				Yes / No					
g	Batch out gravel, then sand, then cement	Yes / No				Yes / No					
h	Turn over 3 times or until color is uniform	Yes / No				Yes / No					
i	Do not use too much water! Add water slowly	Yes / No				Yes / No					
2	**WALL MASONRY**	**Planned?**	**Date**	**Photo #**	**Recommendation Made**	**Done?**	**Date**	**Photo #**	**Recommendation Implemented**		
a	Wet concrete blocks prior to use	Yes / No				Yes / No					
b	Use a line and deadman	Yes / No				Yes / No					MTPTC 69
c	Prop up column steel so it remains plumb	Yes / No				Yes / No					MTPTC 69
d	Use 1/3 bonding, chase the bond before starting	Yes / No				Yes / No					MTPTC 69
e	Vibrate block	Yes / No				Yes / No					
f	Tooth wall at tie columns and openings by 1/3 block	Yes / No				Yes / No					
h	Maintain minimum 2.5 cm between block and column tie	Yes / No				Yes / No					
i	Maximum bed joint thickness 12.5mm	Yes / No				Yes / No					
k	Minimum head joint thickness 12.5mm	Yes / No				Yes / No					
j	Maximum variation in mortar joint size 4mm	Yes / No				Yes / No					
l	Prepare a reasonable amount of mortar to avoid wetting from time to time	Yes / No				Yes / No					
m	Pour the beam in one time	Yes / No				Yes / No					
n	Check the wall is plumb	Yes / No				Yes / No					
o	Maximum variation from plumb 2cm over 3m height	Yes / No				Yes / No					
p	Pour the column after completing min 1 m, max 1.2m heigh of wall	Yes / No				Yes / No					
q	Cure the wall 3 times per day for 3 days	Yes / No				Yes / No					MTPTC 72
r	Check the top of the wall is level	Yes / No				Yes / No					
3	**INTERMEDIATE RING BEAM**	**Planned?**	**Date**	**Photo #**	**Recommendation Made**	**Done?**	**Date**	**Photo #**	**Recommendation Implemented**		
a	Directly below window level, 8cm high, 15cm wide	Yes / No				Yes / No					
b	Use two #3 (3/8") bars	Yes / No				Yes / No					MTPTC 73
c	Use #2 (1/4") stirrups spaced at 20 cm	Yes / No				Yes / No					MTPTC 73
d	Apply one of overlap detailling options	Yes / No				Yes / No					MTPTC 73
4	**OPENING REINFORCEMENT**	**Planned?**	**Date**	**Photo #**	**Recommendation Made**	**Done?**	**Date**	**Photo #**	**Recommendation Implemented**		
a	Form 8x15cm column either side of openings	Yes / No				Yes / No					
b	Use 2 #4 (12mm) vertical bars	Yes / No				Yes / No					
c	Use #2 (1/4") stirrups at 15 cm spacing	Yes / No				Yes / No					
d	Tie reinforcement for doors into foundation beam	Yes / No				Yes / No					
e	Grout reinforcement for windows into blocks 50cm below sill beam	Yes / No				Yes / No					
f	Tie reinforcement into ring beam	Yes / No				Yes / No					
g	Use at least 40 cm overlap	Yes / No				Yes / No					
h	Fill space above door opening with lightweight material, or...	Yes / No				Yes / No					
i	Cast concrete lintel monolithic with ring beam	Yes / No				Yes / No					
j	Reinforce concrete lintel according to standard detail	Yes / No				Yes / No					
5	**ELECTRICAL and PLUMBING**	**Planned?**	**Date**	**Photo #**	**Recommendation Made**	**Done?**	**Date**	**Photo #**	**Recommendation Implemented**		
a	Never break the wall to put electrical or plumbing	Yes / No				Yes / No					MTPTC 75
b	Leave free space for utility piping	Yes / No				Yes / No					
6	**POURING COLUMN CONCRETE**	**Planned?**	**Date**	**Photo #**	**Recommendation Made**	**Done?**	**Date**	**Photo #**	**Recommendation Implemented**		
a	Clean out the bottom before placing formwork	Yes / No				Yes / No					
b	Pour column in one day to the same height as wall	Yes / No				Yes / No					
c	Pour columns after minimum 1m wall built	Yes / No				Yes / No					
d	Distance between formwork and steel bars 25mm minimum	Yes / No				Yes / No					
e	Ensure toothed areas of columns completely filled with concrete	Yes / No				Yes / No					
7	**FINISH THE WALL WITH PLASTER**	**Planned?**	**Date**	**Photo #**	**Recommendation Made**	**Done?**	**Date**	**Photo #**	**Recommendation Implemented**		
a	10mm plaster on both sides of walls	Yes / No				Yes / No					
b	Use clean, fine river sand	Yes / No				Yes / No					
c	Use clean water (not salty or muddy)	Yes / No				Yes / No					
Homeowner Signature:_____					Date: _____	Overall Assessment: Meets Minimum Standard?					
						Yes / No					
BC Engineer Signature: _____					Date: _____	Comments:					
BC Team Leader Signature: _____					Date: _____						
BC Manager Signature: _____					Date: _____						

Homeowner:_____ ID No:_____ GPS: _____ House Type: _____

BC Engineer:_____ Address: _____

STRONG WALL CHECKLIST

build change

BUILD A STRONG ROOF

1	ROOF TRUSSES, BRACING and PURLINS	Planned?	Date	Photo #	Recommendation Made	Done?	Date	Photo #	Recommendation Implemented
a	Dimension of Tweezers 5 x 10 cm	Yes / No				Yes / No			
b	Dimension of Purlin 5 x 7 cm	Yes / No				Yes / No			
c	Dimension of Bracing 5 x 10 cm	Yes / No				Yes / No			
d	Assemble truss on the ground or on the walls	Yes / No				Yes / No			
e	Fix each joint with a bolt per drawing	Yes / No				Yes / No			
f	Use bolt diameter	Yes / No				Yes / No			
g	No. of bolts in truss	Yes / No				Yes / No			
h	Number of bolt at bint joint 8 bh	Yes / No				Yes / No			
i	Check nuts are finger tight	Yes / No				Yes / No			
j	Check nuts are flush with the surface of the timber	Yes / No				Yes / No			
k	Use 4 inch nails for structural connections	Yes / No				Yes / No			
l	Use 3 inch nails for purlin connections	Yes / No				Yes / No			
m	Remove and replace all shiners - exposed nails	Yes / No				Yes / No			
n	Residu all of the surface of timber (Class (II)	Yes / No				Yes / No			
o	Use ventilation in papan gable	Yes / No				Yes / No			
2	**FASCIA BOARD AND CGI SHEET**	**Planned?**	**Date**	**Photo #**	**Recommendation Made**	**Done?**	**Date**	**Photo #**	**Recommendation Implemented**
a	Put fascia board vertical	Yes / No				Yes / No			
b	Use 3" nails for fascia board	Yes / No				Yes / No			
c	Start CGI sheet from the bottom	Yes / No				Yes / No			
d	Nail at purlin	Yes / No				Yes / No			
e	Use special nails for CGI sheets	Yes / No				Yes / No			
f	Nail CGI at every 2 waves	Yes / No				Yes / No			
h	Overlap every side 15 cm	Yes / No				Yes / No			
i	Put GI ridge sheet at the top	Yes / No				Yes / No			
k	Check for leaks and repair with glue	Yes / No				Yes / No			

Homeowner Signature:_____ Date: _____

BC Engineer Signature: _____ Date: _____

BC Team Leader Signature: _____ Date: _____

BC Manager Signature: _____ Date: _____

Overall Assessment: Meets Minimum Standard?

Yes / No

Comments: